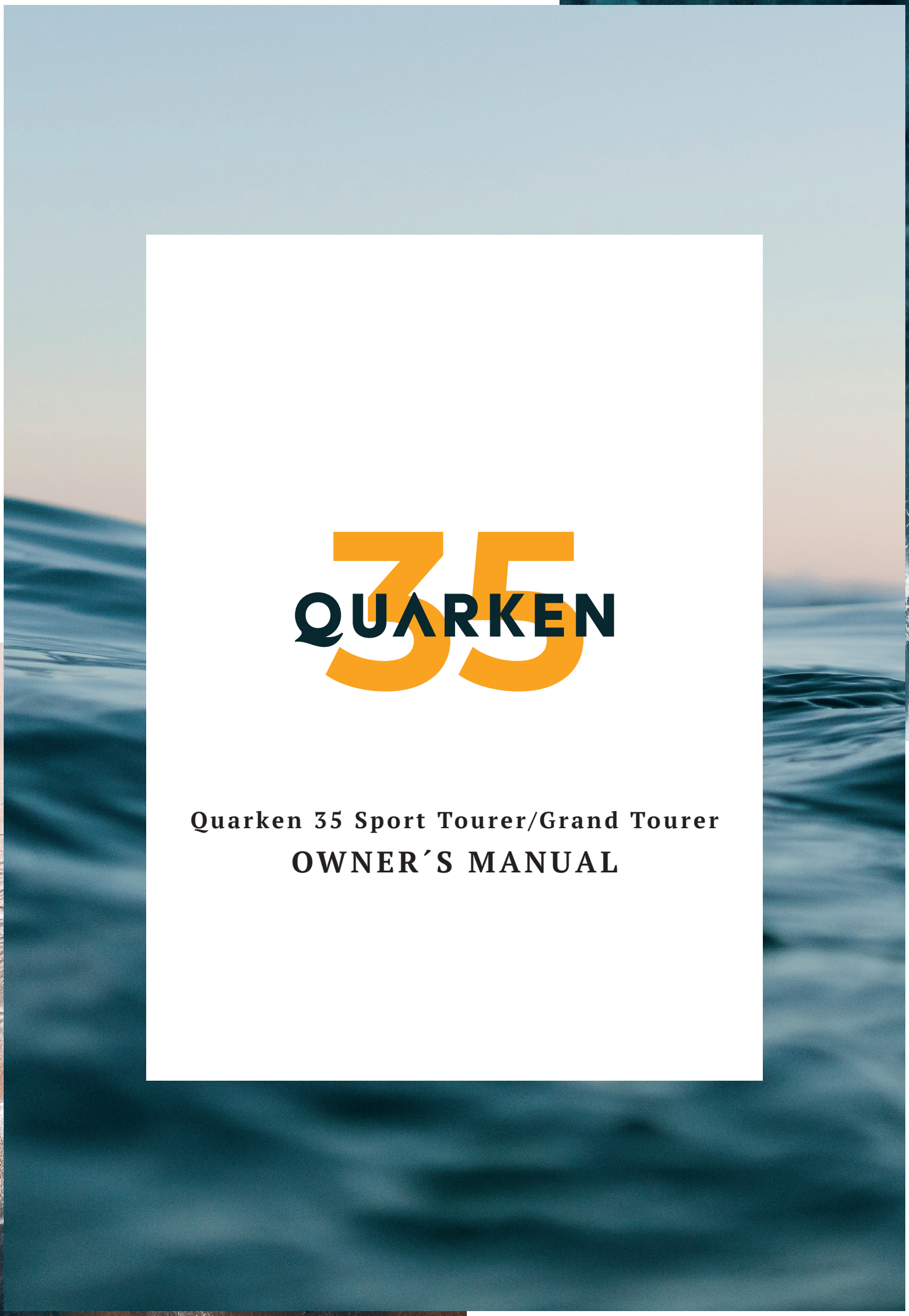

QUARKEN 35

Quarken 35 Sport Tourer/Grand Tourer

# OWNER´S MANUAL

# Table of Contents

1 Introduction....4
1.1 Your owner's manual....4
1.1.1 Safety symbols....4
1.1.2 Document conventions....5
1.2 Owner's responsibilities....5
1.2.1 Safety-related responsibilities....5
1.2.2 Environmental responsibilities....6
1.2.3 Registration....6
1.2.4 Insurance....6
1.3 Document copyright and disclaimer....6
1.4 Warranty and general disclaimer....7
1.5 Contact information....7
2 Safety....8
2.1 Owner and safety....8
2.2 Driver and safety....9
2.3 Boat's safety features....10
2.3.1 Safety equipment and emergency exit....10
2.3.2 Builder's plate....11
2.3.3 Design category....12
2.3.4 Safety labels on board....13
2.4 Fire safety....19
2.4.1 Preventing fire....19
2.4.2 Fire extinguisher....19
2.4.3 In case of fire....20
2.5 Moving on board....20
2.5.1 Designated seating and moving areas....20
2.5.2 Person overboard recovery....22
2.6 Carbon monoxide....22
2.6.1 Preventing carbon monoxide accumulation....23
2.6.2 In case of carbon monoxide poisoning....25
2.7 Grounding....25
3 Boat layout and features....26
3.1 Layout diagrams....26
3.2 Main features....27


© 2025 QUARKEN BOATS / QUARKEN LTD

4 Operating your boat....29
4.1 Fuel system....29
4.1.1 Refueling....31
4.1.2 Maintaining the fuel system....32
4.2 Electrical system....32
4.2.1 Main switch panel and fuses (12 V system)....34
4.2.1.1 Turning power on and off....38
4.2.1.2 Replacing tripped fuses....39
4.2.1.3 Installing additional equipment....40
4.2.2 Batteries (12 V system)....40
4.2.2.1 Charging batteries....40
4.2.3 Shore power....41
4.3 Control system....42
4.3.1 Yamaha engine controls....42
4.3.2 Equipment controls....43
4.3.3 Function control panel....44
4.4 Engines....44
4.4.1 Starting the engines....45
4.4.2 Engine shut-off switch....45
4.4.3 Trimming up the engines....46
4.4.4 Installing an engine....46
4.5 Navigation system....47
4.5.1 Navigation lights....47
4.5.2 Chartplotter displays....48
4.5.3 GPS and sonar system....48
4.5.4 Automatic identification system AIS....49
4.5.5 VHF marine radio....49
4.5.6 Radar....49
4.5.7 Compass....49
4.6 Other control system features....50
4.6.1 Bow thruster....50
4.6.2 Trim control system....51
4.6.3 Anchor windlass....52
4.6.4 Recreational lights and audio system....54
4.6.5 Windshield wipers, horn and device chargers....54
4.7 Hull and superstructure openings....55
4.7.1 Preventing flooding....57
4.7.2 Maintaining hull openings....57
4.7.3 Using side terraces....57
4.8 Draining system....58
4.8.1 Self-draining system....58
4.8.2 Bilge pump system....59


© 2025 QUARKEN BOATS / QUARKEN LTD

4.9 Freshwater system....60
4.10 Septic system....62
4.10.1 Using the septic system....63
4.10.2 Septic waste disposal....64
4.11 Other fixtures and fittings....65
4.11.1 Shower....65
4.11.2 Heater....65
4.11.3 Wet bar....66
4.11.4 Driver's seat....67
4.11.5 Cooking appliances....67
4.11.6 Furnishings....68

5 Measures before and after use....69

5.1 Checks before setting off....69
5.2 After using the boat....70

6 Handling your boat....71

6.1 Lifting....71
6.2 Stability and loading....72
6.3 Driving and navigating....73
6.4 Anchoring, mooring and towing....74

7 Caring for your boat....76

7.1 Regular servicing and repairs....76
7.2 Surface maintenance....76
7.3 Winter upkeep....77

8 Considering the environment....78

9 Reference....79

9.1 Terms and abbreviations....79
9.2 Technical specifications....80


© 2025 QUARKEN BOATS / QUARKEN LTD

# 1 Introduction

## 1.1 Your owner's manual

Congratulations on the purchase of your new Quarken boat. Your boat has been designed in a modular way and with best-in-class functionality. This manual introduces you to the boat's features, helps you operate your boat safely and take care of it in everyday use.

This manual does not provide instructions on general boating safety and seamanship. It is your responsibility as the owner of the boat to ensure that you or anyone else operating your boat have the necessary skills for handling the boat and navigating at sea. If needed, your dealer or local yacht clubs can help you find a suitable course.

This manual does not provide detailed maintenance or troubleshooting instructions. Using an authorized servicing company for regular maintenance and in fault situations ensures that your boat will serve you and give you pleasure for years to come.

This boat is complemented with other equipment manufacturers' components and devices. The manuals for these are referred to in this manual. The manuals are available either in the Owner's Bag that comes along with the purchase, or online on the equipment manufacturers' own Web pages.

Consider this manual, along with the other manuals in the Owner's Bag, an integral part of your boat's equipment. Keep the manuals in a secure place and, if you sell your boat,  hand them over to the next owner.

The images and text in this manual may differ from your boat's configuration, depending on the selected features. Also, some features are not available for all boat models, while others are included as standard for certain models.

The manual is also available online, and in the chartplotter, if you have selected this accessory. However, it is always advisable to have a paper copy at hand. If you need a new copy, download and print the manual at www.quarken.com.

### 1.1.1 Safety symbols

The following symbols are used in this manual:

| | |
|---|---|
| ⚠ DANGER | Imminent hazard which, if not avoided, **will result in death or serious injury**. |
| ⚠ WARNING | Potential hazard which, if not avoided, **could result in death or serious injury**. |
| ⚠ CAUTION | Potential hazard which, if not avoided, **might result in minor or moderate injury**. |


© 2025 QUARKEN BOATS / QUARKEN LTD

**NOTICE** Situation which, if not avoided, **might result in property damage or in an undesirable result**.

**NOTICE** Situation which, if not avoided, **might harm the environment.**

Call for attention.

### 1.1.2 Document conventions

This manual uses the following measurement unit conventions:

- By default, all units are in accordance with the International System of Units (SI).
- Where practical, the United States Customary Units (USCS) are added.
- Wind force is given in the Beaufort scale (BFT).
- Speed is given in knots(kn).

The color codes, when used in diagrams, indicate the following:

- Dark or light green: areas above deck
- Gray and dotted lines: areas below deck
- Yellow lines with circled numbers: standard features or equipment
- Gray lines with circled numbers: optional features or equipment.

For symbols used in this manual, see section *1.1.1 Safety symbols on page 4*.

For terms and abbreviations, see section *9.1 Terms and abbreviations on page 79*.

## 1.2 Owner's responsibilities

### 1.2.1 Safety-related responsibilities

You as the owner of the boat are responsible for your own and the boat occupants' safety on board.

When at sea, you must also consider the safety of other seafarers.


© 2025 QUARKEN BOATS / QUARKEN LTD

Read more in section *2 Safety on page 8* about your and the boat driver's responsibilities in terms of:

- Laws and regulations.
- Maintenance and modifications.
- Sufficient boating skills.
- Knowing your boat.

In addition, make sure that you have familiarized yourself with all the safety aspects in this manual.

### 1.2.2 Environmental responsibilities

As the owner of the boat, ensure that you and your crew know and comply with the environmental laws and regulations in your area.

For tips, see section *8 Considering the environment on page 78*.

### 1.2.3 Registration

Verify if your dealer has registered your boat. For example, in the European Union and many other countries, even a small motor boat must be registered.

To drive a registered boat, you must usually meet the requirements for minimum age and may also need a separate boat driver’s license.

Your dealer or local authorities can provide you information about these requirements in your area.

### 1.2.4 Insurance

A boat insurance can cover for damage when the boat is in use, transported and stored. As the boat owner, you may also be liable for damages and injuries you or anyone else operating your boat causes.

In some countries, boat insurance is required by law. Your dealer or local authorities can provide you information about insurance requirements in your area.

More detailed information on various insurance alternatives is available from insurance companies.

Check the insurance coverage separately for lifting operations.

## 1.3 Document copyright and disclaimer

This owner's manual is protected by copyright. All rights are reserved. This manual may not be reproduced, wholly or in part, without prior authorization by Quarken Boats Oy.

Quarken Boats disclaims any liability related to this document and reserves the right to amend or replace the information at its own discretion without prior notification and liability. Any information in this document may only be used for the purpose specified in this document. In case of conflicting information between this manual and the third-party manufacturers' manuals provided, the


© 2025 QUARKEN BOATS / QUARKEN LTD

information in the latter will apply. Quarken Boats disclaims any liability related to the said third-party manufacturers' manuals.

All rights are reserved for any patents granted, model rights, trade names, trademarks, and technical modifications to the product without prior notification.

## 1.4 Warranty and general disclaimer

Your new boat is covered by a limited warranty for two (2) years. The terms are detailed in a separate warranty card included in the Owner's Bag. It is important that you read the warranty terms and this owner's manual prior to using your boat for the first time.

In case of any problems, contact your dealer within 14 days while ensuring that no further damage is caused during that time.

Your boat is intended for recreational use only. The boat manufacturer disclaims any liability for the consequences of inappropriate use of the boat.

The warranty does not cover defects caused by, for example:

- Incorrect handling such as:
  - Use in more demanding conditions than the design category specified for the boat.
  - Incorrect storage or mooring.
  - Failing to follow the instructions in the manuals provided.
- Carelessness or negligence.
- Alterations or unauthorized repairs.
- Neglected maintenance.

The equipment manufacturers are directly responsible for the warranty of their equipment.

## 1.5 Contact information

Your dealer is your main contact in all questions related to your purchase, fault situations and other questions. The contact information is available at www.quarken.com.

The manufacturer's contact details are included on the builder's plate attached to your boat.


© 2025 QUARKEN BOATS / QUARKEN LTD

# 2 Safety

## 2.1 Owner and safety

As the owner of the boat, you are responsible for ensuring that you and your crew, or anyone else operating your boat, take safety seriously. This includes:

- Acquiring the necessary boating and navigation skills before setting out to sea.
- Understanding the safety features and limitations of the boat.
- Being aware of and complying with local laws and safety requirements.
- Proper maintenance.
- Ensuring safety is not compromised by modifications.
- Making sure that the boat is equipped with fire extinguishers before using the boat, according to local rules and regulations.

**⚠ WARNING**

Neglecting the necessary safety precautions can cost lives. The driver of the boat is responsible for the operation of the boat and the safety of fellow passengers.

Make sure that there is always at least one skilled, nominated driver on board.

For your responsibilities as driver, see section *2.2 Driver and safety on page 9.*

### Laws and regulations

You must be aware of the local laws and safety requirements. Many countries have special requirements such as:

- Boat driver's license is mandatory.
- The boat must always have a nominated responsible driver on board.
- All persons on board must wear a personal flotation device at all times when at sea.
- Personal flotation devices must comply with specific requirements.

Your dealer can help you with information about local and international regulations.

### Maintenance and modifications

Make sure you have your boat properly maintained to ensure safety and the validity of the warranty.

For maintenance, repair and alteration work, you should always turn to competent and trained workshops. Always maintain your boat properly and consider any deterioration that will occur over time. Changes that can affect the boat's safety features must be assessed, carried out and documented by competent professionals.

**⚠ CAUTION**

Any change to the boat's centre of gravity, such as a new engine type or poor distribution of heavy equipment, will significantly affect the stability, trim and performance of the boat.

The boat manufacturer disclaims any responsibility for the consequences of unauthorized modifications.


© 2025 QUARKEN BOATS / QUARKEN LTD

## 2.2 Driver and safety

As the driver of the boat, you are responsible for ensuring that you and your crew take safety seriously. This includes:

- Acquiring the necessary boating and navigation skills before setting out to sea.
- Understanding the safety features and limitations of the boat.
- Behaving responsibly.

**⚠ WARNING**

Neglecting the necessary safety precautions can cost lives. The driver of the boat is responsible for the operation of the boat and the safety of fellow passengers.

Make sure that there is always at least one skilled, nominated driver on board.

**Boating skills**

As the responsible driver, you must:

- Ensure that you and your crew have the necessary boating skills.
  - Know how to maneuver the boat in different weather conditions.
  - Be familiar with the use of all safety equipment.
  - Be capable of taking action in various emergency situations such as person overboard recovery and towing.
  - Read all the applicable instructions before using the boat. The boat may be equipped with devices that are not covered by this manual.
- Drive responsibly.
  - Respect the anticipated wind and wave conditions set by the design category.
  - Remain within the limits of your own boating ability.
  - Never drink and drive.
- Know and obey the rules of the International Regulations for Preventing Collisions at Sea (COLREG). Be aware of local accident reporting requirements.

If needed, sailing schools and clubs regularly organize courses and rescue drills.

**⚠ WARNING**

Inappropriate use of this boat not compatible with safe boating is strictly prohibited.

- The boat is intended for recreational use only.
- It is always important to adjust the speed and direction of the boat to the sea conditions and to remain within the limits of your own boating ability.
- When using the boat for activities such as water skiing and fishing, you must understand your responsibilities and the risks involved.


© 2025 QUARKEN BOATS / QUARKEN LTD

**Knowing the boat**

You must be aware of and understand the following:

- Limitations set out by the boat's design category.
- Capacity restrictions.
  - Never overload the boat.
  - Check the maximum load and number of persons allowed from the builder's plate next to the steering wheel.
- Always make sure that you and the passengers use the designated seating areas while underway.
  - See section *2.5.1 Designated seating and moving areas* *on page 20* for the exact location of the seating areas.
- Location and content of the warning labels on the boat.
- Location of all the required safety equipment.
  - Ensure all safety equipment is in order and you know how to use it.
  - Keep the necessary safety equipment on board at all times.
  - Have personal flotation devices or life jackets for all passengers.
  - Check section *2.3.1 Safety equipment and emergency exit* *on page 10* for details.

# 2.3 Boat's safety features

## 2.3.1 Safety equipment and emergency exit

The owner of the boat is responsible for ensuring that the safety equipment on the boat meets the rules and regulations of the local authorities and works properly.

The driver must be familiar with the safety equipment and ensure that it is properly used.

**⚠ WARNING**

- Never obstruct passageways to fire exits and hatches.
- Never obstruct access to safety controls, fuel shut-off valves and main switches.
- Never deliberately or inadvertently block ventilation for compartments or spaces, particularly those containing fixed gasoline engines, fixed gasoline tanks and batteries.
- Never obstruct access to portable fire extinguishers.
- Never modify any of the craft’s systems, unless competent to do so.
- Never store gasoline containers or equipment containing gasoline in any area not designated as the specific storage area of gasoline.


© 2025 QUARKEN BOATS / QUARKEN LTD

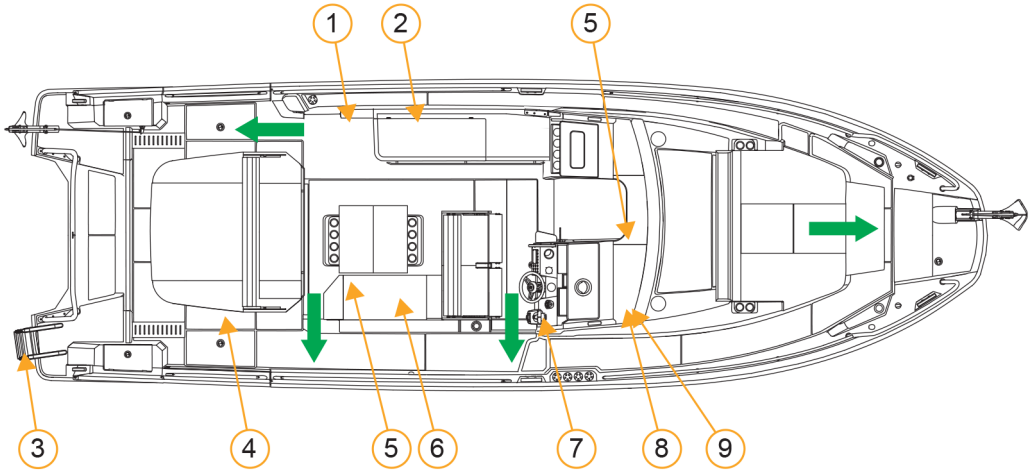


*Figure 2.1 Locations of emergency exits and safety equipment*

1. Main switch panel
2. Recommended place for fire blanket (optional)
3. Swim ladder
4. Recommended place for life rafts (optional) Maximum 80 kg
5. Recommended places for fire extinguishers
6. Fuel valves
7. Engine shut-off switch
8. Fire alarm
9. Carbon monoxide monitor

The main switch panel includes five switches that must be turned off in case of emergency.

**Additional safety equipment**

You are responsible for providing the additional safety equipment. There is local variation but many countries require:

- Personal flotation devices (PFD) for all passengers
- Distress signal devices for emergency situations
- Fire blanket
- Other equipment such as bails and lifesavers
- There must be one fire alarm or carbon monoxide monitor on the boat. Check the functioning of the alarm annually by pressing the test button.

## 2.3.2 Builder's plate

The builder's plate is located in the vicinity of the steering wheel.


© 2025 QUARKEN BOATS / QUARKEN LTD

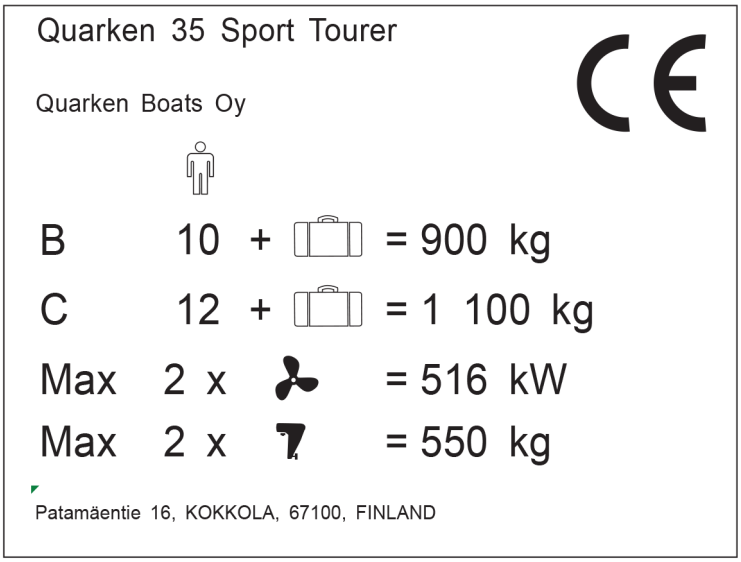


In addition to the boat model, it provides important information related to safety:

- Design category defining the limitations of use.
- Maximum load and number of persons allowed on board.
- Maximum engine power and weight.

The maximum load capacity indicated on the builder’s plate does not include fuel.

**⚠ WARNING**

Always respect the limitations of the boat:

- Observe the weather conditions and always stay within the limits of your boat's design category.
- When loading the boat, never exceed the maximum recommended number of persons. Always use the seating provided.
- Regardless of the number of persons on board, the total weight of persons and equipment must never exceed the maximum recommended load.
- Do not exceed the maximum engine power.

## 2.3.3 Design category

Design categories define the essential safety requirements for the design and construction of a watercraft. These requirements should be met through a conformity assessment procedure before placing a watercraft on the European Union market. The design category is indicated on the Builder's plate.

The design categories (A-D) define the wind force and significant wave height in which the craft is designed to operate in. Your boat's design category, that is stated on the builder's plate, is C/B.

In category C


© 2025 QUARKEN BOATS / QUARKEN LTD

- The wind force is no more than 6 on the Beaufort scale (approx. 14 m/s).
- The significant wave height is no more than 2 m.

In category B

- The wind force is no more than 8 on the Beaufort scale (approx. 21 m/s).
- The significant wave height is no more than 4 m.

The significant wave height is the average height of the highest one third of all waves, visually estimated by an experienced observer. Some waves may be twice as high as the significant wave height. These conditions can occur in open water on lakes, estuaries, and in coastal waters in moderate weather.

## 2.3.4 Safety labels on board

It is important that you read and understand all these safety labels. Ensure that your crew also understand them.

If you need to replace a broken or missing label, contact the boat manufacturer and refer to this manual.

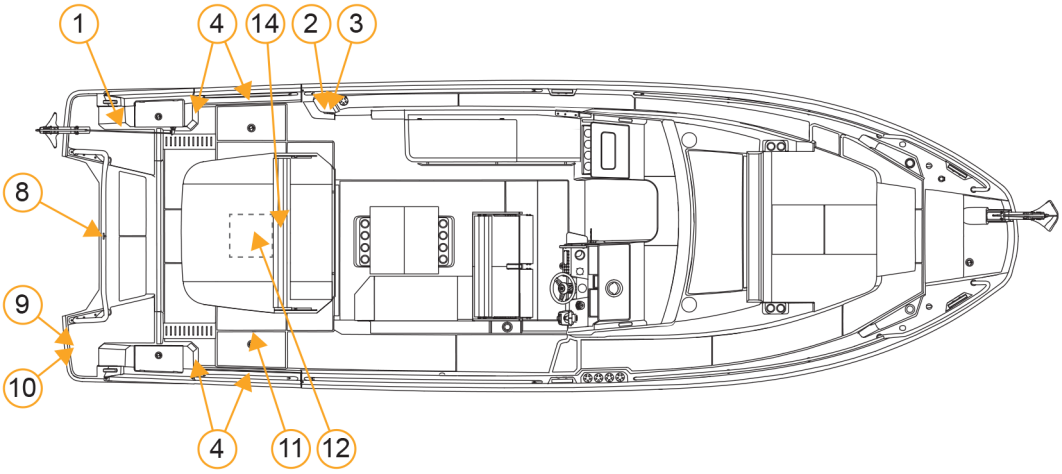


*Figure 2.2 Location of safety labels in rear section*


© 2025 QUARKEN BOATS / QUARKEN LTD

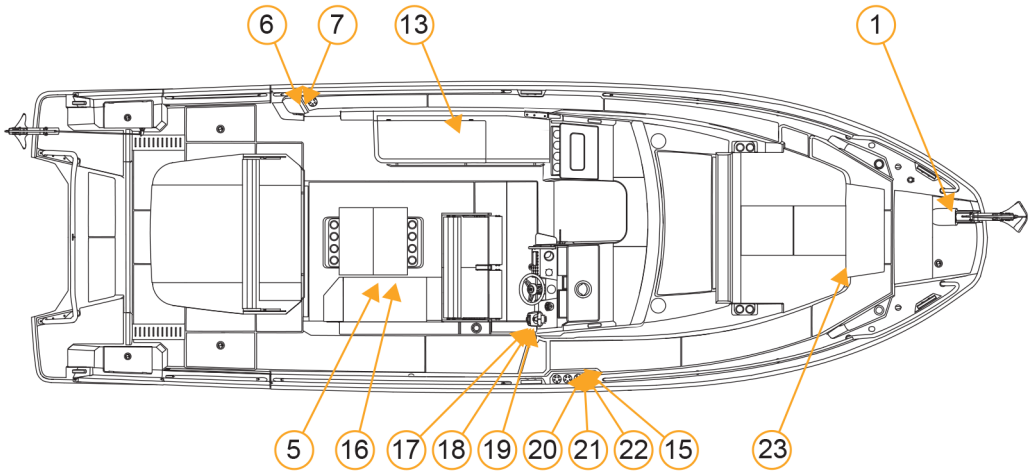


*Figure 2.3 Location of safety labels in front section*

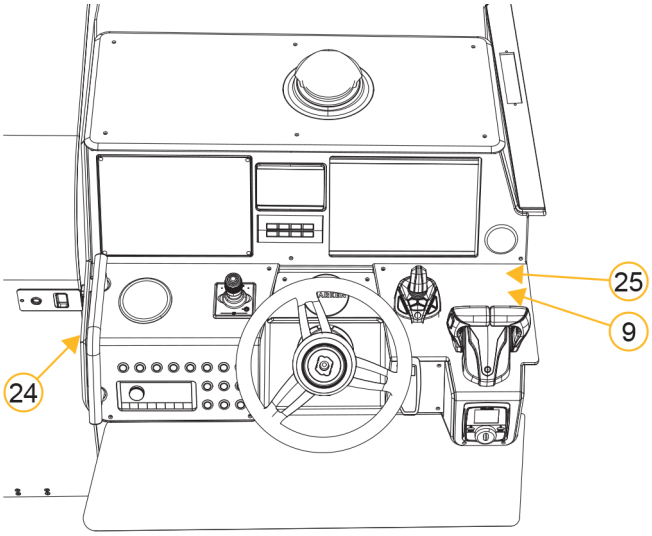


*Figure 2.4 Location of steering console safety labels*


© 2025 QUARKEN BOATS / QUARKEN LTD

| Location | Label | Clarification |
|---|---|---|
| 1 | 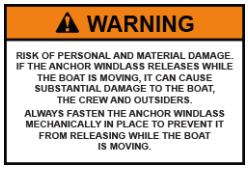 | **WARNING**<br>Risk of personal and material damage. If the anchor windlass is released while the boat is moving, it can cause substantial damage to the boat, crew and outsiders.<br>Always fasten the anchor windlass mechanically in place to prevent it from being released while the boat is moving. |
| 2 | 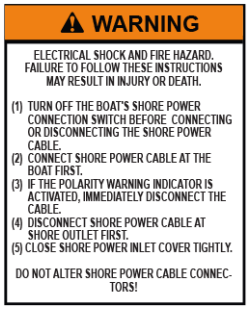 | **WARNING**<br>Electrical shock and fire hazard. Failure to follow these instructions may result in injury or death.<br>**1.** Turn off the boat's shore power connection switch before connecting or disconnecting the shore power cable.<br>**2.** Connect the shore power cable to the boat first.<br>**3.** If the polarity warning indicator is activated, immediately disconnect the cable.<br>**4.** Disconnect the shore power cable from the shore outlet first.<br>**5.** Close the shore power inlet cover tightly.<br>Do not alter the shore power cable connectors! |
| 3 | | **WARNING**<br>Keep the hatch of the shore power plug closed when it is not in use. |
| 4 | | **WARNING**<br>Always keep the hatches tightly closed when the boat is in water. |
| 5 | | Fire extinguisher |
| 6 | | **WARNING**<br>Avoid personal injury.<br>Stay inside the deck rails (and gates) when the boat is under way. |
| 7 | 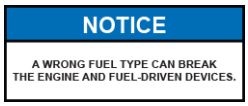 | **NOTICE**<br>A wrong type of fuel can damage the engine and other fuel-driven devices. |


© 2025 QUARKEN BOATS / QUARKEN LTD

| Location | Label | Clarification |
|---|---|---|
| 8 | | **WARNING**<br>Use caution when a skier is in tow, as the tow rope may backlash into the cockpit when released. |
| 9 | 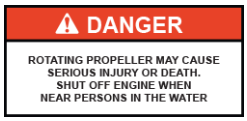 | **DANGER**<br>A rotating propeller may cause serious injury or death.<br>Shut off the engine when there are people in the water near the boat. |
| 10 | 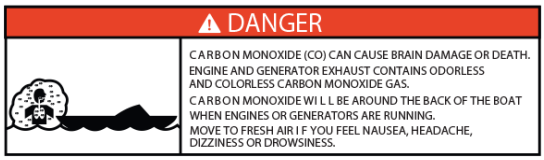 | **WARNING**<br>Carbon monoxide (CO) can cause brain damage or death.<br>Engine and generator exhaust contains odorless and colorless carbon monoxide gas.<br>Carbon monoxide will be around the back of the boat when engines or generators are running.<br>Move to fresh air if you feel nausea, headache, dizziness or drowsiness. |
| 11 | | **WARNING**<br>No ventilation is provided.<br>Fuel vapors are a fire and explosion hazard.<br>To avoid injury or death, do not store fuels of flammable liquids here. |
| 12 | 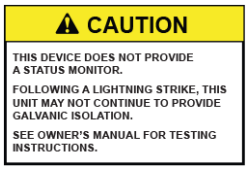 | **CAUTION**<br>This device does not provide a status monitoring.<br>Following a lightning strike, this unit may not continue to provide galvanic isolation.<br>See owner's manual for testing instructions. |
| 13 | 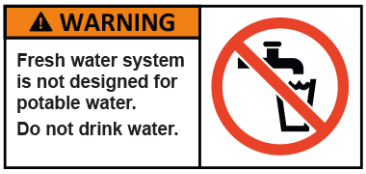 | **WARNING**<br>The boat's fresh water system is not designed for potable water.<br>Do not drink water from the boat's fresh water system. |
| 14 | | **WARNING**<br>Never use the roof structure for anchoring, mooring or towing. The boat can capsize. |


© 2025 QUARKEN BOATS / QUARKEN LTD

| Location | Label | Clarification |
|---|---|---|
| 15 | 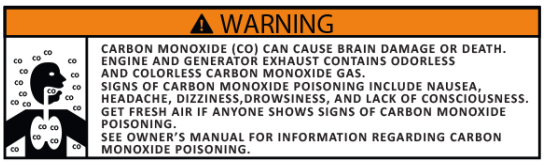 | **WARNING**<br>Carbon monoxide (CO) can cause brain damage or death.<br>Engine and generator exhaust contains odorless and colorless carbon monoxide gas.<br>Signs of carbon monoxide poisoning include nausea, headache, dizziness, drowsiness, and lack of consciousness.<br>Get fresh air if anyone shows signs of carbon monoxide poisoning.<br>See the owner's manual for information regarding carbon monoxide poisoning. |
| 16 | 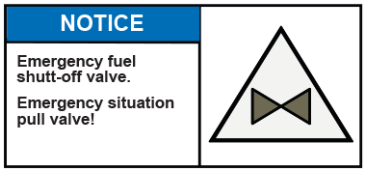 | **NOTICE**<br>Emergency fuel shut-off valve.<br>Emergency situation pull valve! |
| 17 | | **WARNING**<br>Qualified operator to be in control at all times. Operation by an unqualified operator can cause loss of control. This may result in severe injury, death, or property damage.<br>Boat stability and handling will change with weight distribution. Read owner's manual before use. |
| 18 | | **WARNING**<br>Never exceed the maximum recommended number of persons when loading the boat.<br>Make sure that the total weight of persons and equipment never exceeds the maximum recommended load, regardless of the number of persons on board |
| 19 | 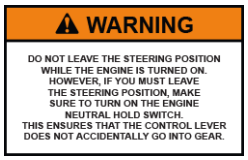 | **WARNING**<br>Do not leave the steering position when the engine is turned on.<br>However, if you must leave the steering position, turn on the engine neutral hold switch. This ensures that the control lever does not accidentally go into gear. |
| 20 | 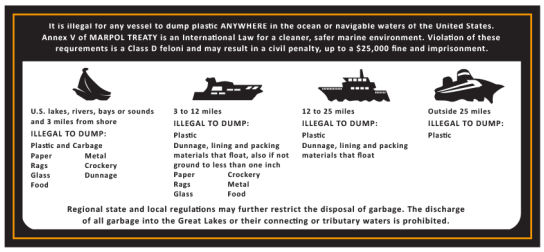 | Description of prohibitions concerning disposal of waste in US waters. |


© 2025 QUARKEN BOATS / QUARKEN LTD

| Location | Label | Clarification |
|---|---|---|
| 21 | | **WARNING**<br>Avoid injury or death caused by fire or explosion resulting from leaking fuel.<br>Inspect the system for leaks at least once a year. |
| 22 | 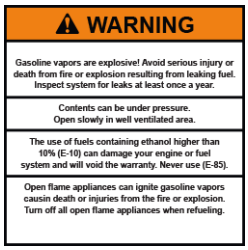 | **WARNING**<br>Gasoline vapors are explosive! Avoid serious injury or death from fire or explosion resulting from leaking fuel. Inspect the system for leaks at least once a year.<br>The content can be under pressure. Open slowly in well ventilated area.<br>The use of fuels containing ethanol higher than 10% (E-10) can damage your engine or fuel system and will void the warranty. Never use fuels with 85% ethanol content (E-85).<br>Open flame appliances can ignite gasoline vapors, causing death or injuries from fire or explosion. Turn off all open flame appliances when refueling. |
| 23 | | **CAUTION**<br>Remove the deck cushions and the table from the foredeck when in speeds exceeding 15 knots. |
| 24 | 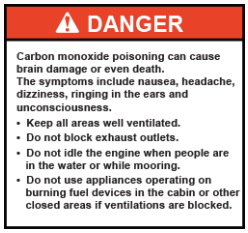 | **DANGER**<br>Carbon monoxide poisoning can cause brain damage or even death.<br>The symptoms include nausea, headache, dizziness, ringing in the ears and unconsciousness.<br>• Keep all areas well ventilated.<br>• Do not block exhaust outlets.<br>• Do not idle the engine when people are in the water or while mooring.<br>• Do not use appliances operating on burning fuel devices in the cabin or other closed areas if ventilations are blocked. |
| 25 | 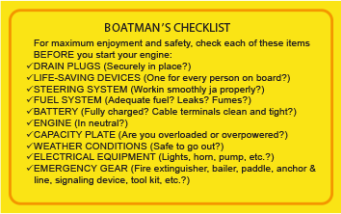 | Boatman's checklist |


© 2025 QUARKEN BOATS / QUARKEN LTD

# 2.4 Fire safety

## 2.4.1 Preventing fire

**⚠ WARNING**

The engines, heater, gas cooker and other fuel-driven devices are the most common potential fire hazards.

- Never make changes to your boat's electrical or fuel system, or allow an unqualified person to make changes to any system on the boat.
- Never fill the fuel tank or handle fuel when the engines are running.
- Never smoke or use a naked flame when handling fuel.
- Never keep fuel in canisters or containers under the deck.
- Never leave the boat unattended when a gas cooker or heater is in use.
- Do not allow curtains or other flammable materials to get in contact with the heater, gas cooker, hot engine parts or naked flames.
- Ensure that all ventilation ducts are free.
- Always keep the bilge clean and check it regularly for fuel fumes and oil leakages. A smell of fuel is a potential sign of leaking fuel.

## 2.4.2 Fire extinguisher

The boat has two designated locations where you can install hand-held fire extinguishers. The fire extinguishers in the boat must be rated more than 5A/34B. For the location, see the diagram in section *2.3.1 Safety equipment and emergency exit on page 10*

**⚠ WARNING**

Safety hazard.

Fire extinguishers are not factory-installed.

Ensure that the boat is equipped with fire extinguishers before using it.

The local rules and regulations for the fire extinguishing equipment may vary.

Make sure that the amount of fire extinguishers, and the placement is accoring to local regulations before using the boat.

The driver is responsible for ensuring that:

- All crew members are aware of the location and operation of the fire extinguishing equipment.
- The fire extinguishing equipment is easily accessible also when the boat is loaded.


© 2025 QUARKEN BOATS / QUARKEN LTD

The owner of the boat is responsible for:

- Ensuring that the fire extinguishing equipment is up-to-date.
- Replacing it when needed.

You must have the hand-held fire extinguishers inspected regularly at specified intervals, depending on the legislation in your country.

Contact the local fire authorities for the inspection policy in your area. If you are unsure of the inspection policy in your country, have your hand-held fire extinguishers inspected once a year.

### 2.4.3 In case of fire

**⚠ WARNING**

A fire on board can easily lead to an explosion. Act quickly!

- Turn off all the power sources:
  - Turn off the engines and all the main switches.
  - If the boat is connected to shore-side electricity, disconnect the cable.
- Make sure everyone on board is wearing a personal flotation device.
- Use the fire extinguisher or a fire blanket to put out the fire.
- **If the fire starts to get out of control, evacuate the boat to save lives.**
- If needed, call for help using a distress signal device.

**⚠ WARNING**

Do not use water! If the fire gets in touch with the engine fuel or the flammable gas in the gas cooker, water can spread the fire and cause an explosion.

## 2.5 Moving on board

### 2.5.1 Designated seating and moving areas

To prevent passengers from falling overboard, it is important to make sure everyone on board respects the areas indicated in the following diagram:

- Areas indicated with dark green circles are seats designated for passengers while underway.
- Areas where you can go when leaving the harbour and docking are highlighted in light green.
- Grip handles which you can use when seated or when moving around on the boat are pointed at with callout numbers.
- While on the way, you need to use lifeline (in the marked areas) which is attached to given positions.


© 2025 QUARKEN BOATS / QUARKEN LTD

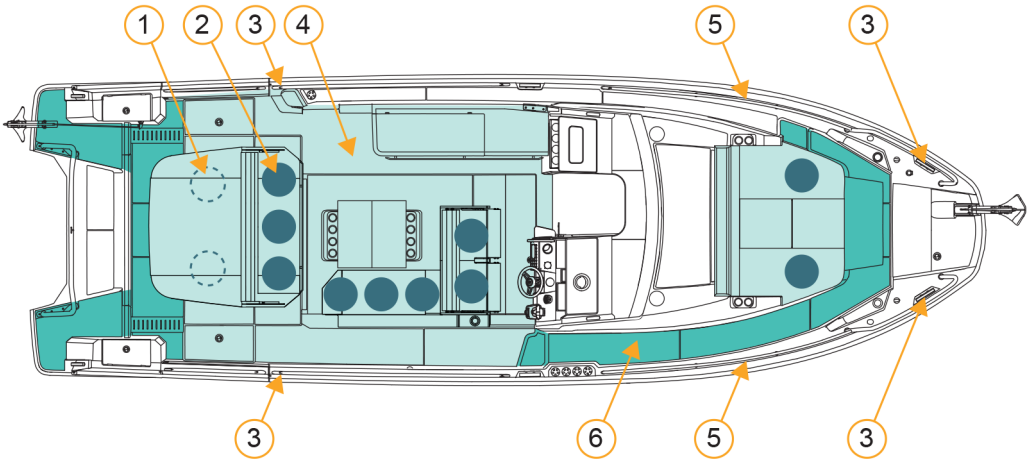


*Figure 2.5 Designated seating and moving areas*

1. Two extra seating areas in category C (12)
2. Designated seating areas in category B (10)
3. Hooking point for lifeline
4. Moving area while underway (marked in light green)
5. Hooking point for lifeline in the railing
6. Moving area while the boat is stationary (marked in green)

While underway, remember to ensure that everyone obeys the following rules:

- Always be seated in the designated seating areas.
- Avoid going onto the swimming platform and foredeck. Never stay on the foredeck at speeds exceeding 30 kn.
- Always wear a personal flotation device.
- Always use the grip handles for support when seated or when moving around on the boat.

**⚠ WARNING**

Never exceed the maximum recommended number of persons when loading the boat.

Make sure that the total weight of persons and equipment never exceeds the maximum recommended load, regardless of the number of persons on board.

**⚠ CAUTION**

Risk of losing balance, falling, or falling overboard.

Only use the designated grip handles for support when seated or when moving around on the boat.

Do not use any other metal tubes or railings for gripping. They are not designed to sustain the strain from a person's weight.

**⚠ CAUTION**

The roof is not designed to carry a person's weight.

Never climb onto the roof or hang from it.


© 2025 QUARKEN BOATS / QUARKEN LTD

### 2.5.2 Person overboard recovery

If a person has fallen into the water:

- Point the boat directly into the wind.
- Stop the engines.
- Hand the person a flotation device if they are not wearing one.
- Help the person back on board.
  - Use the swim ladder at the stern to reboard the person safely.
  - The ladder can also be pulled down from the water.

**⚠ DANGER**

A revolving propeller is life-threatening to a swimmer or a person who has fallen overboard.

**Turn off the engines when someone is climbing on board.**

## 2.6 Carbon monoxide

Engine exhausts contain carbon monoxide, which is a colorless and odorless gas. It is harmful to your health in high concentrations, and even in low concentrations if inhaled for a prolonged time.

**⚠ WARNING**

Carbon monoxide poisoning can cause brain damage or even death.

The symptoms include nausea, headache, dizziness, ringing in the ears and loss of consciousness.

- Keep all areas well ventilated.
- Do not block exhaust outlets.
- Do not idle the engines when people are in the water or while mooring.
- If the boat is equipped with a CO alarm, exit all closed spaces immediately when it sounds.


© 2025 QUARKEN BOATS / QUARKEN LTD

## 2.6.1 Preventing carbon monoxide accumulation

**⚠ WARNING**

There is always a risk of carbon monoxide accumulation when the engines are running, the boat is moving slowly or at a standstill, or when using burning fuel-based devices.

To minimize the danger:

- Do not rev the engines or idle them longer than necessary.
- Avoid using a canopy or side curtains. If you do use them, always ensure sufficient ventilation.
- If you have a convertible top, operate with the forehatch open and leave the cabin door open.
- Do not use fuel-driven appliances in the cabin or other closed areas when anchored, moored or docked. Only use them in areas where fresh air can circulate.
- Leave enough space between the engines and any obstacle.
- Inspect the exhaust system regularly.

### Situations with a risk of high carbon monoxide accumulation

Beware of the following situations as they can cause increased concentrations of carbon monoxide. Exhausts can get trapped and blow towards boat occupants when:

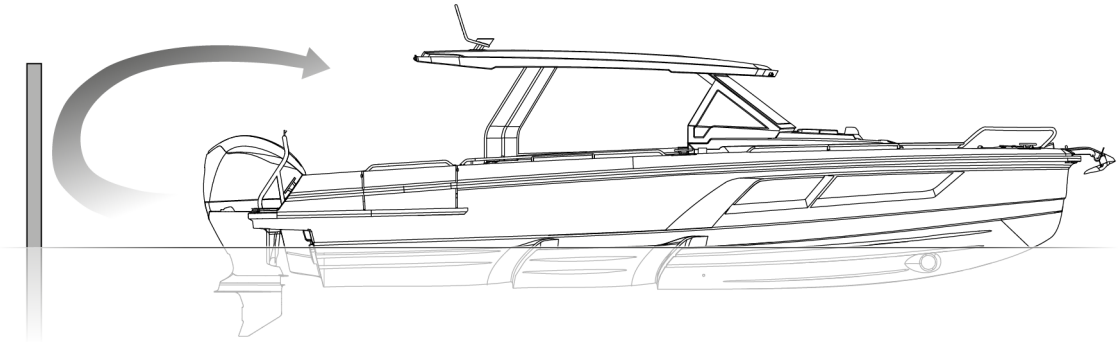

*Figure 2.6 Operating at a standstill*


© 2025 QUARKEN BOATS / QUARKEN LTD

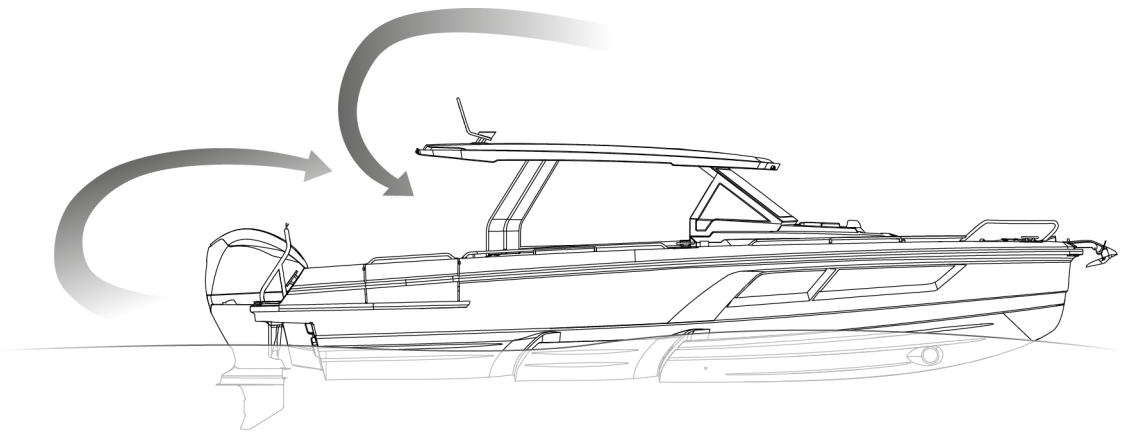

*Figure 2.7 Operating at slow speeds or in a tailwind*

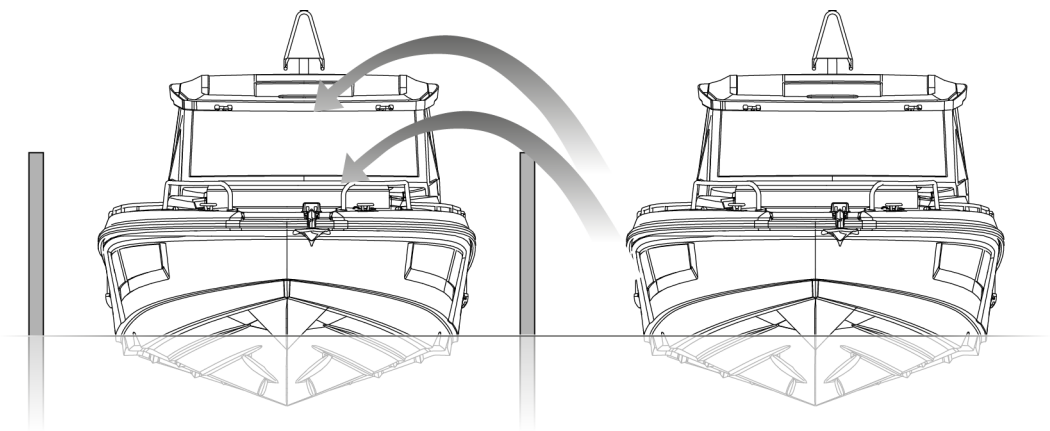

*Figure 2.8 Running the engines in confined spaces*

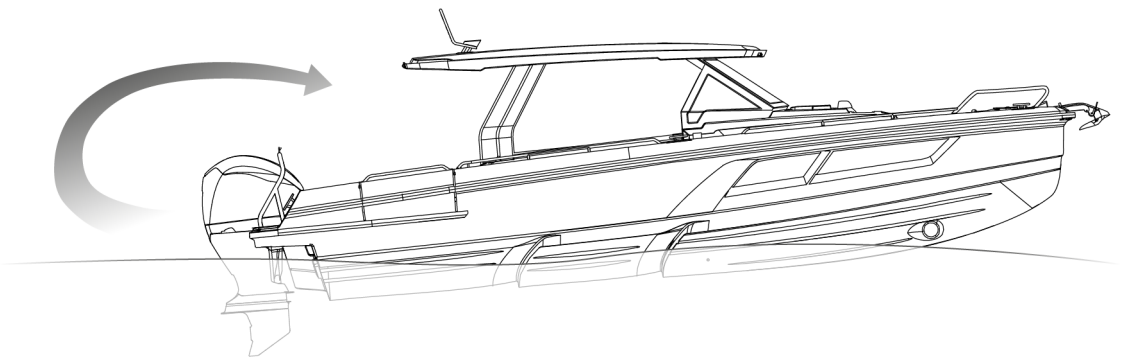

*Figure 2.9 Operating with the bow high*


© 2025 QUARKEN BOATS / QUARKEN LTD

### 2.6.2 In case of carbon monoxide poisoning

**⚠ WARNING**

Carbon monoxide poisoning can cause brain damage or even death.

The symptoms include nausea, headache, dizziness, ringing in the ears and loss of consciousness.

- Keep all areas well ventilated.
- Do not block exhaust outlets.
- Do not idle the engines when people are in the water or while mooring.
- If the boat is equipped with a CO alarm, exit all closed spaces immediately when it sounds.

If you suspect carbon monoxide poisoning:

- Have the victim breathe fresh air deeply.
- If breathing stops, resuscitate.
- A victim often revives, then relapses because organs are damaged by lack of oxygen. **Seek immediate medical attention.**

## 2.7 Grounding

In the case of grounding:

- Ensure that everyone on board wears a PFD.
- Everyone on board must come up on the deck.
- Stop the engines and trim them up so that they are lifted out of the water. Switch off all the main electrical switches.
- Check the condition of the propeller and the lower part of the engines.
- Inspect the boat for leaks. Inspect the keel from bow to stern.
- You may try to empty the boat using a bilge pump, but they are not designed for leaks.
- Make an emergency call or use a distress signaling device.
- If the leak is small, and at least one of the engines is functioning and the boat is not grounded, drive to the nearest shore to prevent the boat from sinking.
- If the boat is equipped with a life raft, prepare it for use and use it if needed.
- In case of a leak, keep doors and hatches closed, if possible. Open doors and hatches may cause the boat to drown more quickly.
- It is not recommended to go inside of the boat if it has a leak.

**⚠ WARNING**

Risk of entrapment and drowning! A big leak may cause the boat to lose stability and sink in a matter of seconds. Do not go or stay inside the boat.


© 2025 QUARKEN BOATS / QUARKEN LTD

# 3 Boat layout and features

## 3.1 Layout diagrams

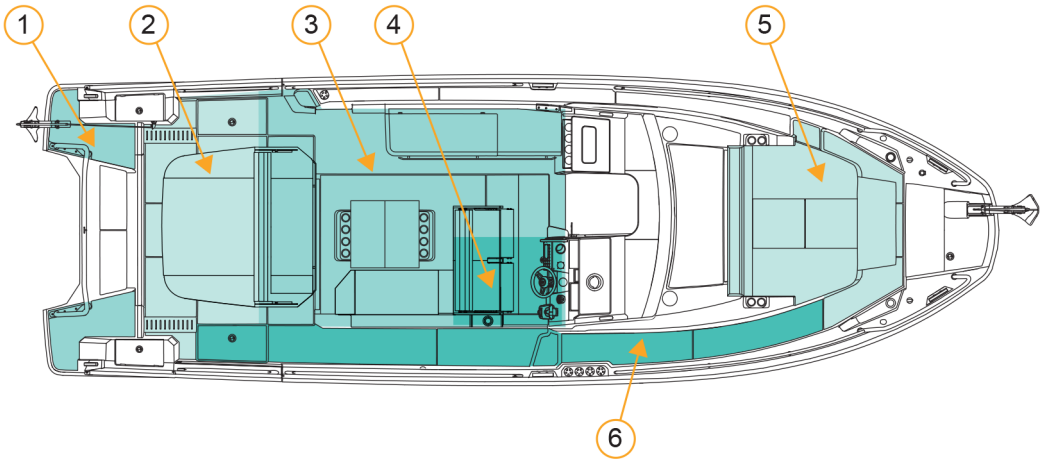


*Figure 3.1 Above deck areas*

1. Swimming platform
2. Aftdeck
3. Cockpit
4. Steering position
5. Foredeck
6. Sidedeck


© 2025 QUARKEN BOATS / QUARKEN LTD

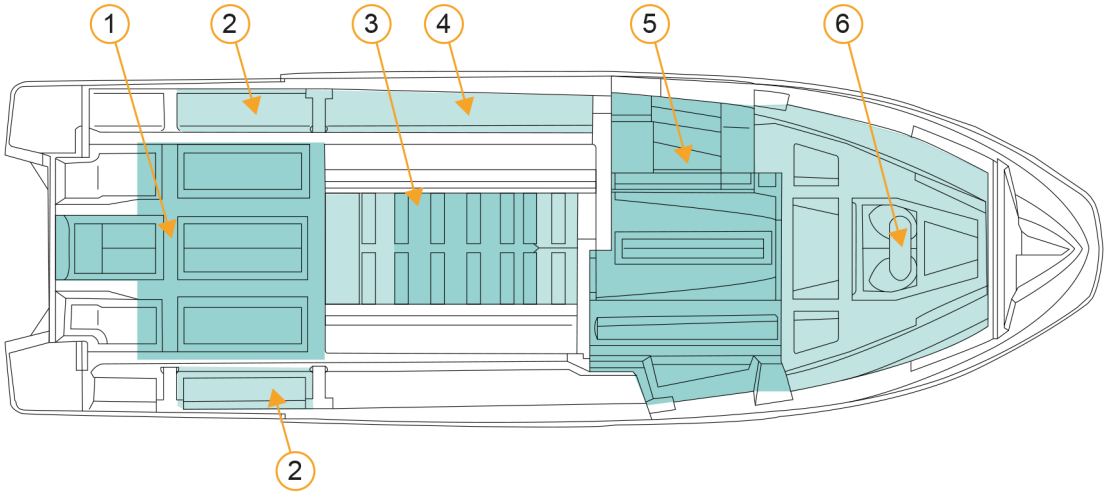


*Figure 3.2 Below deck areas*

1. Aft storage
2. Side storage
3. Tank space
4. Side technical space
5. Front cabin
6. Front cabin bed

## 3.2 Main features

Your boat is equipped with a wide range of features. Standard features include, for example:

- Powerful, industry-leading Yamaha F300 V6 outboard engines and an electronic control system
- Innovative Nordic design and modular construction
  - Two-stepped fiberglass hull construction providing a more comfortable ride and better fuel economy
  - Modular design allowing flexible furnishings
  - Manually opening side terraces
  - Large swimming platforms with easy access
  - Large social areas back and front
  - Wet bar
  - Large bed for two persons in front cabin
  - Large sofa that can be extended to a bed in the front cabin
  - Toilet and shower compartment


© 2025 QUARKEN BOATS / QUARKEN LTD

    - Ergonomic steering position
    - T-Top roof
- Classifications and certifications
    - Design category B/C
    - Capacity for ten (10) or twelve (12) persons

The systems and their standard and optional features are described in more detail in section *4 Operating your boat on page 29* in this manual.

A large selection of accessories is also available. For an up-to-date list, visit www.quarken.com or enquire from your dealer.


© 2025 QUARKEN BOATS / QUARKEN LTD

# 4 Operating your boat

## 4.1 Fuel system

Your boat is equipped with a fixed fuel system for gasoline engines. A fixed diesel system is available as an option to power a heater. In some models in the US, an LPG system is included for the optional gas cooker feature.

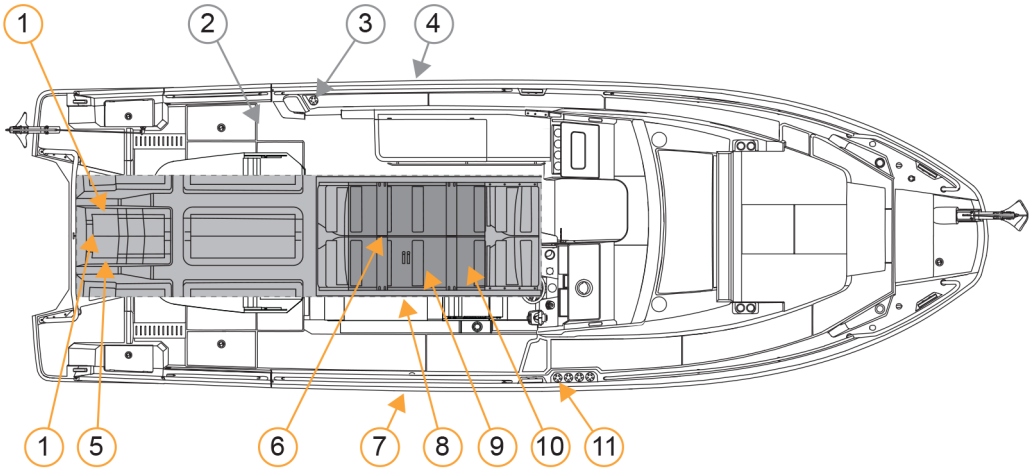


*Figure 4.1 Fuel system*

1. Gasoline fuel filter
2. Diesel tank*
3. Diesel filling inlet*
4. Diesel tank ventilation*
5. Manual gasoline pump
6. Carbon canister
7. Gasoline fuel tank ventilation opening
8. Gasoline fuel valves
9. Gasoline fuel tank access hatch
10. Gasoline fuel tank
11. Gasoline fuel filling inlet

* Optional feature


© 2025 QUARKEN BOATS / QUARKEN LTD

**⚠ WARNING** The exhaust gases of fuel-powered devices are extremely dangerous if exposure is prolonged. Over-exposure to carbon monoxide can be lethal.

- Never leave the boat unattended when appliances are on, and regularly check that they function as they should.
- Make sure that the cabin is sufficiently well ventilated. Keep ventilation ducts open.
- Beware of engine exhausts. See *2.6 Carbon monoxide on page 22* for details.

### Gasoline fuel system

The engines run on gasoline. The fuel filling inlet is labeled "Fuel". The fuel level in the tank can be monitored from the engine multi-function panel on the steering console (see section *4.3.1 Yamaha engine controls on page 42).*

The gasoline fuel system is described in detail in the engine manufacturer's manual. Check the manual especially for:

- Recommended fuel types
- More detailed refueling instructions
- Instructions for use and care.

### EPA compliant fuel system

Your boat is compliant with the US Environmental Protection Agency (EPA) regulations.

The boat is equipped with a carbon canister. The system captures gasoline fumes and prevents fuel overflow when refueling.

In addition, there is a fuel valve controlling the fuel supply to the engines. The fuel valve is located by the gasoline fuel filter.

### Diesel fuel system

The optional diesel fuel system is used to power the optional diesel-powered heater and stove. The diesel fuel filling inlet is labeled "Diesel". The fuel level in the tank can be monitored from the engine multi-function panel on the steering console (see *4.3.1 Yamaha engine controls on page 42*).

For instructions for use and care, see *4.11.2 Heater on page 65* and the manufacturer's manual.


© 2025 QUARKEN BOATS / QUARKEN LTD

## 4.1.1 Refueling

**⚠ WARNING**

Gasoline and diesel are highly flammable and poisonous liquids. Take extra caution when handling them:

- Shut off the engines and all other fuel-based appliances. Extinguish cigarettes. Do not operate switches or other devices that may generate sparks while refuelling.
- Avoid spilling any fuel. In case of spill, wipe it up immediately. Clean spills on skin with soap and water.
- In case you swallow, inhale or get fuel into your eyes, seek medical attention.
- Ensure that no fuel has leaked into the bilge or the engine space.
- Always keep spare canisters on the deck. Storing them under the deck or in the cabin poses a risk of fire and environmental pollution.

### Correct fuel type

When refilling the engine tank, use a high-quality gasoline that meets the minimum octane rating. For recommended fuel types, see the engine manual.

If you have selected the heater accessory, there is also a diesel tank. When filling the diesel tank, use diesel fuel.

***NOTICE***

The wrong fuel type can break the engines or other fuel-driven devices.

- Do not use diesel fuel when refueling the engine tank.
- Only use diesel when filling the diesel tank.
- Always check that you are using the correct fuel filling inlet.

For more information, read the equipment manufacturer's manual.

### Filling inlets

The locations of the gasoline and diesel fuel filling inlets are included in the description of the fuel system.

**⚠ CAUTION**

The fresh water inlet and the septic waste suction fitting on your boat may be located next to a fuel filling inlet, if you have selected these optional features.

Do not mix up the different inlets.

Ensure that the caps labeled "Water" and "Waste" are tightly closed when refueling.

### Fuel level

The fuel level in the tanks can be monitored on the Engine multi-function panel (see *4.3.1 Yamaha engine controls on page 42*).


© 2025 QUARKEN BOATS / QUARKEN LTD

Consider that you may not be able to fill up the tank if the boat is not level. The trim and how the boat is loaded affect the fuel tank capacity. In addition, always add an extra 20% reserve to the expected fuel consumption for the trip.

**NOTICE**

Environmental hazard!

Do not overfill the tank. Make sure the fuel does not overflow into the sea from the fuel ventilation opening.

Note that the ventilation system on the US market prevents fuel from flowing over.

### 4.1.2 Maintaining the fuel system

The fuel tank and filter are located in the fuel tank space. Use the inspection hole located inside the starboard sofa in the cockpit to access the fuel tank space. You need to access the fuel tank space in order to:

- Check the filter once a month during the boating season.
- Empty any water accumulated in the filter.

You do not need to access the fuel tank in the fuel tank space. For maintenance and in case of fault in the fuel system, turn to a professional workshop.

## 4.2 Electrical system

Your boat is equipped with a 12 V electrical direct current (DC) system. Shore power with a 110/230 V current is available as an option.


© 2025 QUARKEN BOATS / QUARKEN LTD

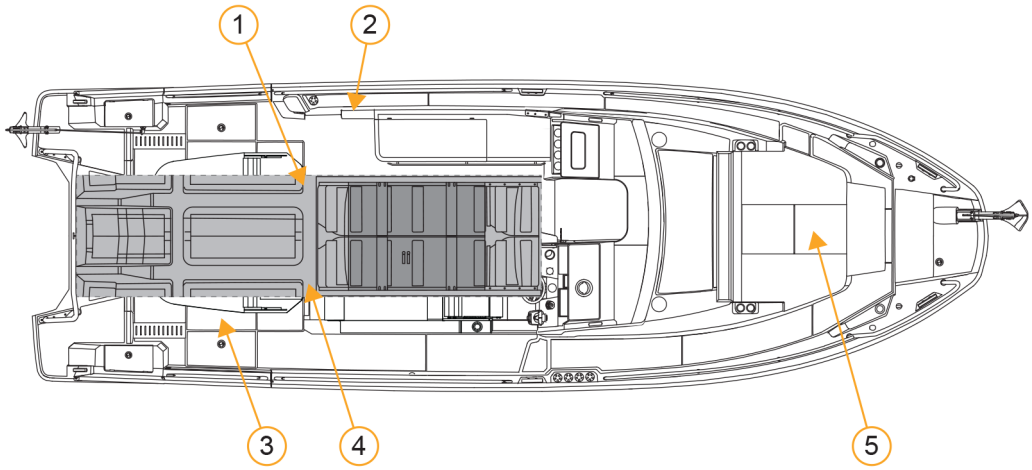


*Figure 4.2 12 V electrical system*

1. Start main switch unit and fuses (under deck)
2. Main switch panel and battery switches
3. Start and service batteries (under deck)
4. Service main switch unit and fuses (under deck)
5. Bow thruster battery and fuses (under front cabin bed)

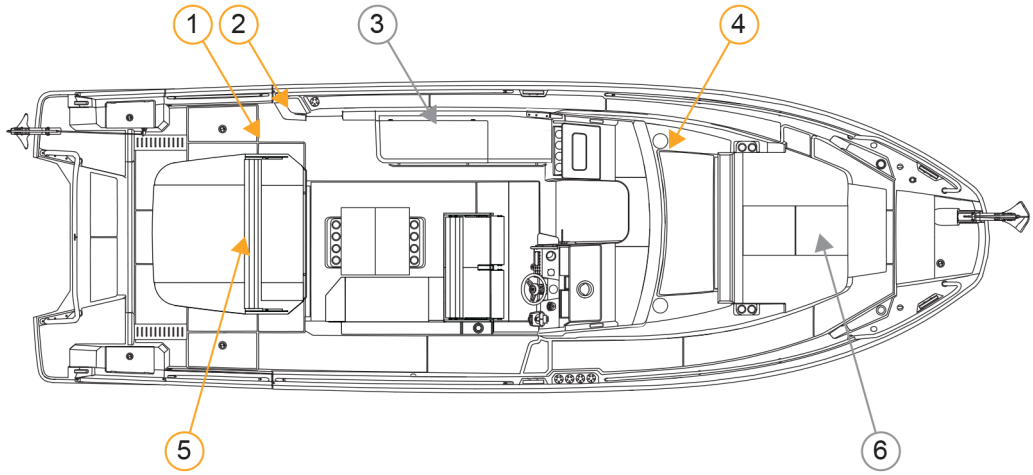


*Figure 4.3 Shore power*

1. Shore power main unit and fuses (under deck)
2. Shore power plug
3. Galley socket and stove*
4. Toilet socket (under deck)
5. Battery charger (under deck)
6. Water heater socket (under front cabin bed)*

*Optional

For details, see the boat's wiring diagrams available in the Owner's Bag.


© 2025 QUARKEN BOATS / QUARKEN LTD

**⚠ WARNING**

Risk of electric shock.

- Never switch off the current when the engines are running. This may cause damage to the alternator.
- Never perform any work on the electrical circuits when they are connected. Never alter the electrical system or any related diagrams but turn to a professional specialized in marine electrical systems.
- Never modify the rated current amperage of over-current protective devices.
- Never reset or replace electrical appliances with components exceeding the rated current amperage of the circuit.
- Never leave the boat unattended with the electrical system energized, except for the automatic bilge pump, fire protection and alarm circuits.

### 4.2.1 Main switch panel and fuses (12 V system)


© 2025 QUARKEN BOATS / QUARKEN LTD

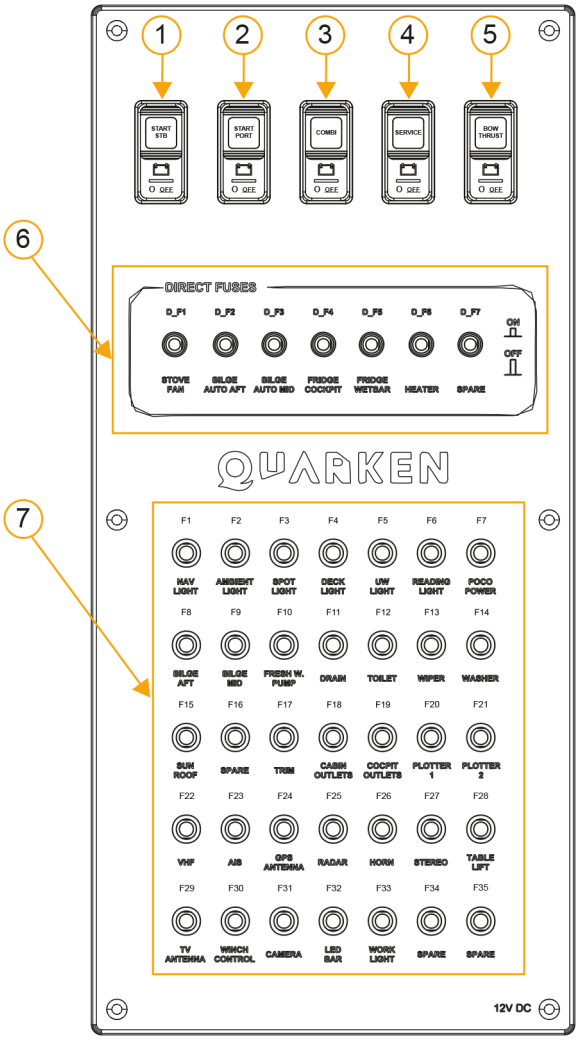


*Figure 4.4 Main switch panel*

1. Start battery starboard engine
2. Start battery port engine
3. Combine batteries switch
4. Service batteries
5. Bow thruster battery
6. Direct fuses: direct supply fuses/power switches
7. Regular fuses

The main switch panel is located on the port side wall in the cockpit, aft of the galley (see diagram in section *4.2 Electrical system on page 32*).

If you have selected optional accessories requiring a high level of power, the heavy-duty fuses for them are located in the technical space.


© 2025 QUARKEN BOATS / QUARKEN LTD

### Main switches

The 12 V equipment is controlled by the main switches on the main switch panel and the individual function buttons on the steering console.

- The start main switch controls the engine functions in the steering console.
- The combi main switch is used to combine the power of the service batteries and the start batteries, in case the start batteries do not have enough power to start the engines.
- The bow thruster main switch controls the bow thruster and optional anchor windlass.
- The service main switch controls all other devices.

### Cockpit switch unit - Bow thruster

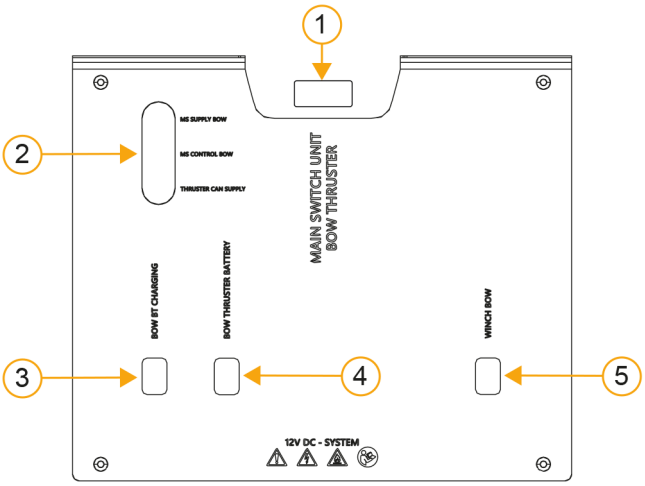


1. Switch
2. Fuses
3. Fuse
4. Fuse for bow thruster battery
5. Fuse for winch in the bow


© 2025 QUARKEN BOATS / QUARKEN LTD

## Main switch unit - Service

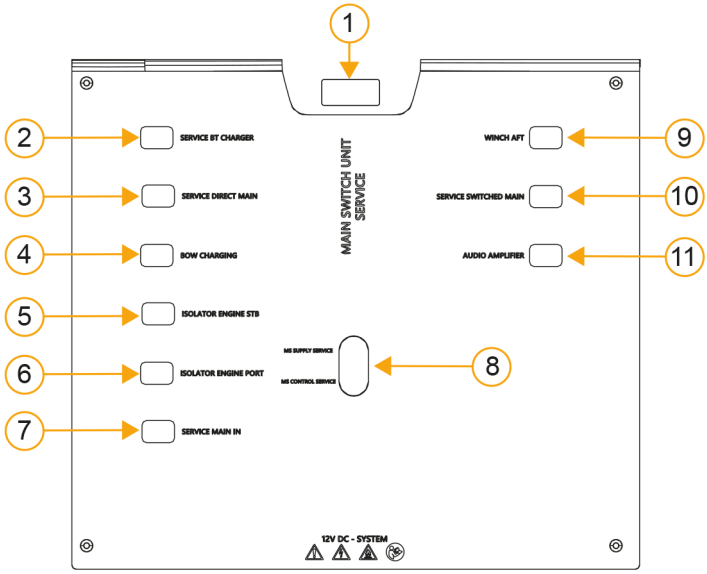


1. Switch
2. - **11.** Fuses

## Start battery switches

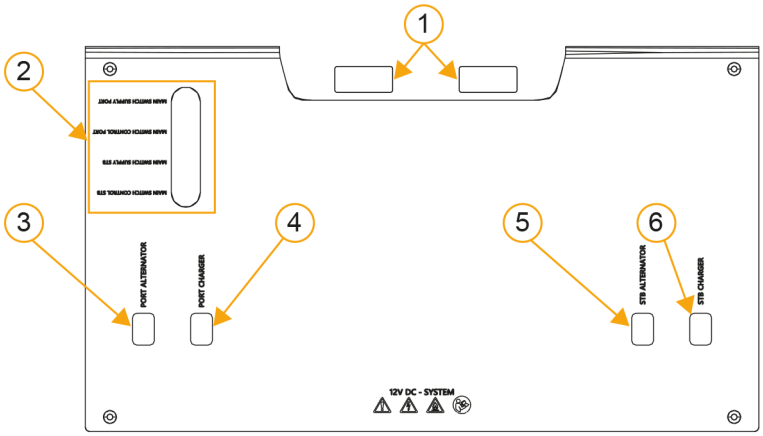


1. Switches
2. Fuses
3. Port alternator fuse
4. Port charger fuse
5. Starboard alternator fuse
6. Starboard charger fuse


© 2025 QUARKEN BOATS / QUARKEN LTD

**Direct supply fuses/switches**

**NOTICE**

Risk of material damage.

Devices connected to direct supply fuses can become overheated and damaged if the direct supply switches are turned off too soon.

Always keep the direct supply switches turned on, even when switching power off from the device or appliance.

The Direct fuses buttons work both as fuses and power switches for devices that need current even when the main switches are turned off. The following appliances and devices are connected to them:

- Bilge pump
- Fridge
- Second fridge*
- Heater*
- Audio channel memory*
- Aux for water tank or retrofits*

* Optional

When a direct supply fuse's power switch is pushed down, the switch is on. When pushed up, it is off.

**Regular fuses**

The regular fuses are connected to the devices that are powered by the service main switch, but fuses are also located in other areas. Positions F16-F35 are spare fuses for retrofits.

**Heavy-duty fuses**

For components that require high level of power, there are heavy-duty fuses. There heavy-duty fuses are located in three difrerent locations.

Located at the front of the technical space there are two black main switch modules. The one further aft is connected to the start batteries. The start battery module is remotely controlled with the start switches on the main switch panel.

The other module in the technical space is for optional equipment requiring a high level of power.

There is an additional heavy-duty fuse panel located under front cabin bed. This panel is connected to the bow thruster and the optional front anchor windlass. The fuses for the bow thruster and anchor windlass are provided by the manufacturer.

### 4.2.1.1 Turning power on and off

When the power in the main switch is turned on, the background color is green. When it is turned off, the color is red with the text Off.

It is a good idea to always turn on all the switches prior to getting underway, and turn them off when leaving the boat for longer than one hour.


© 2025 QUARKEN BOATS / QUARKEN LTD

- To turn on power supply to the engines, turn on the start main switches.
- To activate power for the boat's other equipment, turn on the service main switch.
- To activate power for bow thruster and anchor windlasses, turn on the bow thruster main switch.

After the main switches are turned on, the individual functions can be operated from the steering console.

### 4.2.1.2 Replacing tripped fuses

**⚠ WARNING** Damaged electronic circuits may cause an electric shock.

- Do not install components in the electrical system that exceed the electronic circuit's nominal amperage.
- Before connecting an electric circuit make sure that the circuit is not damaged and that there is no short circuit or a fire.
- Any damaged equipment must be serviced before it is put back into use.

#### Direct supply fuses/switches

If a fuse is tripped, the switch springs up to the off position. To switch it back on, press the button after the overload.

***NOTICE*** Do not turn the switch back on before you have found the reason for the interference.

#### Regular fuses

Regular fuses are trip switches that break the circuit and spring up when tripped.

To switch them back on, press the button after the overload.

**⚠ CAUTION** Do not turn the switch back on before you have found the reason for the interference.

#### Heavy-duty fuses

Check the functioning of heavy-duty fuses from the holes in the fuse covers. If the metal strip inside is damaged, the fuse is tripped.

**⚠ WARNING** Changing tripped heavy-duty fuses yourself poses a risk of electric shock and serious injury.

- Do not change a tripped fuse yourself but contact a qualified electrician.
- Even opening the cover is not recommended. If it is necessary to open the cover, make sure that all the current cables from the batteries are disconnected.


© 2025 QUARKEN BOATS / QUARKEN LTD

#### 4.2.1.3 Installing additional equipment

It is recommended that you do not alter the 12 V electrical system or any related diagrams yourself but always turn to a qualified electrician specialized in marine electrical systems.

When installing retrofits to the boat:

- Use the Aux circuits shown on the wiring diagram available in the Owner's Bag.
- Make sure the device power supply is connected to the fuse.
- Connect the device both to the power supply and the negative bar.

**⚠ CAUTION**

- Never modify the rated current amperage of the over-current protective devices.
- Never reset or replace electrical appliances with components exceeding the rated current amperage of the circuit.
- Always check that the circuit is not damaged. Make sure there is no short circuit or a fire caused by possible defects in the circuit before connecting an electrical circuit.
- Have damaged equipment serviced before putting it back in use.

The boat manufacturer disclaims any liability for retrofits or unauthorized modifications.

### 4.2.2 Batteries (12 V system)

Your boat has a total of 5 batteries.

- Two start batteries for the engines.
- One battery for the anchor windlass and bow thruster (optional).
- Two service batteries for the other equipment on the boat.

The battery for the anchor windlass and bow thruster is located under the front cabin bed, and the rest of the batteries are located in the technical space. See diagram in section *4.2 Electrical system* on page 32.

#### 4.2.2.1 Charging batteries

There is no need to manually charge the batteries. They are charged automatically either via the engine or shore power charger. The system includes an overload sensor.


© 2025 QUARKEN BOATS / QUARKEN LTD

⚠ CAUTION

- Make sure that the battery compartment is always well ventilated when charging batteries.
- If you cannot use the engine or shore power chargers, remove the batteries from the boat for charging with an external charger.

  Never use an external charger on the boat!

## 4.2.3 Shore power

Shore power is available as an option. It enables you to use electrical devices running on the standard mains current. Shore power also enables automatic charging of the boat's batteries. The boat is connected to an external 110 V (North America) or 230 V (Europe) power source on the shore or the jetty via a cable.

The shore power feature consists of:

- Shore power main unit with automatic fuses.
- Automatic charger.
- Plugin unit for connecting to the shore power source.
- Power outlet sockets on the boat.
- The boat can also be equipped with cooking appliances and a water heater.

The locations of the shore power components are included in description of the electrical system.

### Using shore power

⚠ DANGER

Risk of electric shock and fire.

- Do not touch the high-voltage system.
- Do not let the power cable hang in the water.
- Never modify the connections on the shore power cable.

To avoid the risk of electric shock and fire, connect the power in the following order:

1. Keep the shore power switched off before connecting and disconnecting the cable.
2. Connect the cable first to the boat and then to the shore power supply.
3. Disconnect the shore power cable first from the shore power supply and only then from the boat.
4. After use, close the plug cover to prevent it from getting wet.

### Troubleshooting and maintenance

⚠ WARNING

Never modify or repair the connections in the 110 V/230 V system. Always turn to a qualified electrician.

- Have the shore power system checked at least once every two years.
- Always disconnect the shore power cable when the system is not in use.
- Metal casings of installed electrical equipment must always be grounded.


© 2025 QUARKEN BOATS / QUARKEN LTD

- Use grounded electrical equipment only.
- If the ground fault breaker is tripped, disconnect the shore power cable immediately.

  Contact a qualified electrician for repairs before using the system again.

# 4.3 Control system

The boat's engines and equipment are controlled from the steering console. The main console consists of:

- Various controls for engines, navigation and other equipment.
- Touchscreen displays for the engines and the chartplotter.
- Function control panel with function keys for lights and other features.

The configuration of the controls may vary depending on your selection of optional features.

## 4.3.1 Yamaha engine controls

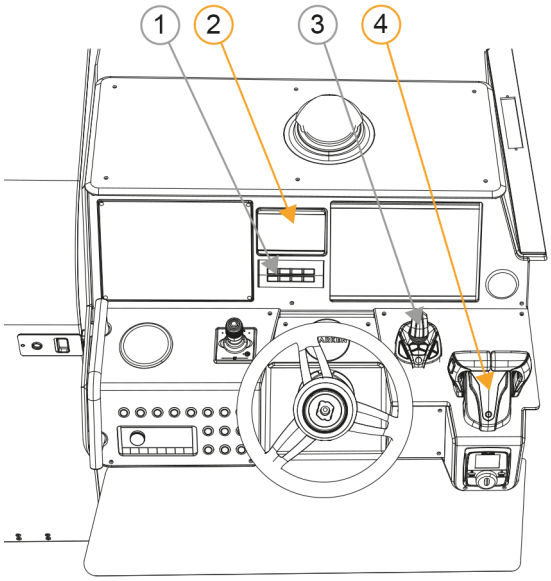


*Figure 4.5 Yamaha engine control functions on the steering console*

1. Autopilot control panel*
2. Engine multi-function panel
3. Helm Master® EX joystick*
4. Engine electronic control

*Optional

You can find all the standard and optional engine control functions on the steering console. For example:


© 2025 QUARKEN BOATS / QUARKEN LTD

- The Yamaha engine electronic control combines the shift, the throttle and remote electrical operations.
- The engine multi-function panel shows information about fuel consumption, tank level and trim level, among others.
- The Yamaha Helm Master® EX technology is a fully integrated boat control system providing additional precision to steering.

For more details, see the engine manual and Yamaha Motor's Web pages. You can check the engine model from the label attached to the engine.

## 4.3.2 Equipment controls

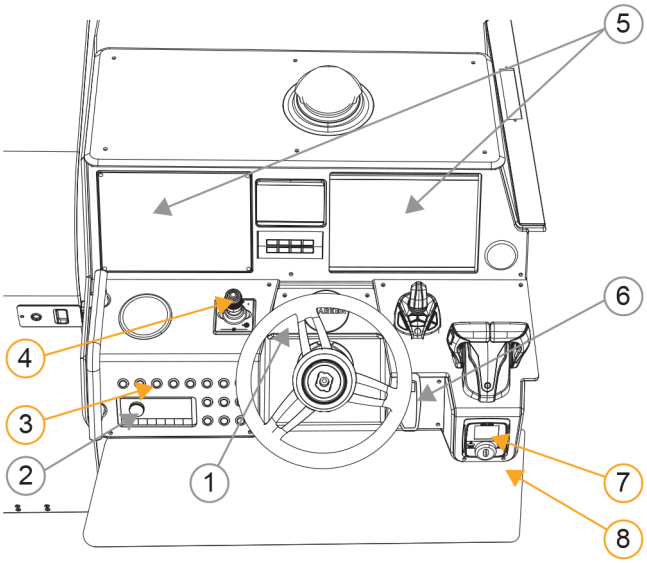


*Figure 4.6 Controls on the steering console*

1. Wireless charging platform for phone*
2. Audio system control unit*
3. Function control panel
4. Bow thruster control unit
5. Chartplotter displays*
6. Aft anchor windlass control unit*
7. Trim tabs control unit
8. Switch for driver's seat height adjustment

* Optional

Most equipment controls are located on the steering console. The location of the controls may vary depending on the configuration of your boat.


© 2025 QUARKEN BOATS / QUARKEN LTD

## 4.3.3 Function control panel

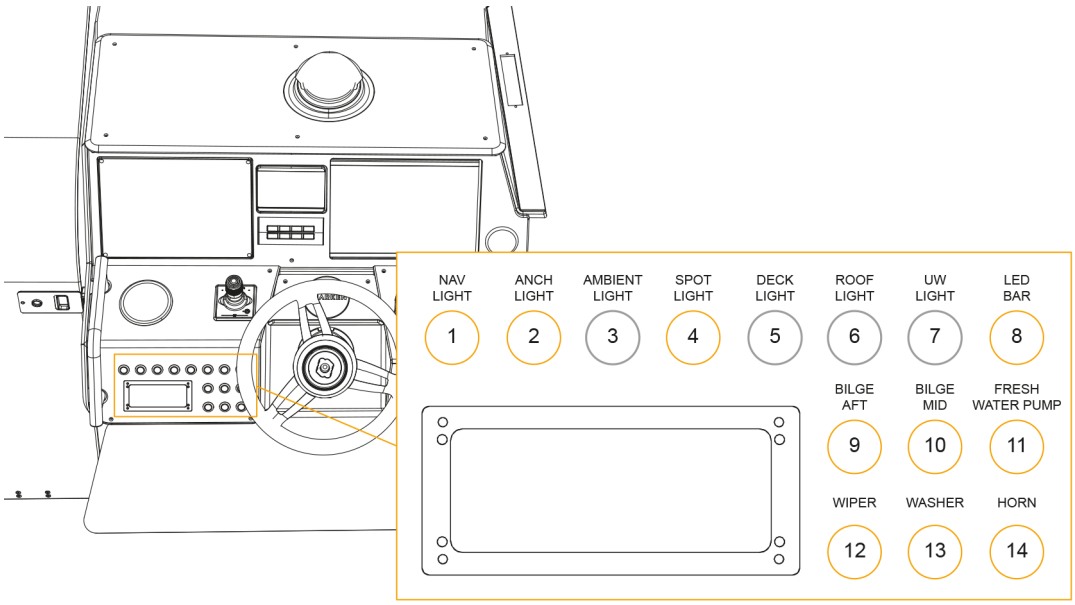


*Figure 4.7 Controls on the function control panel*

1. Navigation lights
2. Anchor light
3. Ambient light*
4. Spot light
5. Deck lights*
6. Roof lights*
7. Underwater lights*
8. Panel light
9. Bilge pump aft
10. Bilge pump mid
11. Fresh water pump
12. Windshield wiper
13. Windshield washer
14. Horn

*Optional

# 4.4 Engines

Your boat is equipped with powerful industry-leading Yamaha outboard engines. Get familiar with the extensive engine manual provided in the Owner´s Bag.

The manual provides instructions for use, routine servicing and maintenance to ensure proper functioning of the engines.


© 2025 QUARKEN BOATS / QUARKEN LTD

The boat's engine start switch is located on the main switch panel. Other engine functions are available from the steering console. See section *4.3.1 Yamaha engine controls* on page 42.

**⚠ WARNING**

For the maximum permitted engine power and weight, check the builder's plate.

Do not exceed the maximum permitted engine power.

## 4.4.1 Starting the engines

**NOTICE**

The engines require a break-in period before using them for the first time. Carefully follow the instructions in the engine manual.

To start the engines:

- Turn on the start switch on the main switch panel. When the power in the main switch is on, the background color is green.
- Follow the start-up checklist and operating instructions in the engine manual.

**⚠ CAUTION**

If the boat has an engine shut-off switch, attach the shut-off cord to yourself before detaching the mooring lines.

**⚠ WARNING**

Do not leave the steering position while the engines are turned on. However, if you must leave the steering position, make sure to turn on the engine neutral hold switch. This ensures that the control lever does not accidentally go into gear.

1. Move the control lever into neutral position.
2. Press the engine neutral hold switch and make sure the light turns on.
3. Detach the engine shut-off cord.

## 4.4.2 Engine shut-off switch

An engine shut-off switch is a safety feature for situations where the driver becomes incapacitated.

The engine shut-off switch turns off the engines in case you fall overboard or stumble on board. The switch is located on the steering console.

**⚠ CAUTION**

- Attach the shut-off cord to yourself immediately after detaching the mooring lines. It only works if you have hooked it to yourself.
- To prevent the engines from stopping unintentionally, remember to detach the cord before docking.

For more detailed instructions, see the engine manual.


© 2025 QUARKEN BOATS / QUARKEN LTD

## 4.4.3 Trimming up the engines

The engines are equipped with a trim function that can be controlled from the steering console.

When trimming the engines all the way up, make sure they are straight in line with the keel, and not turned left or right. Also make sure the engines can move freely all the way up to the raised position without hitting any equipment or other objects.

For more detailed instructions on how to use the power trim, read the manufacturer's manual.

**NOTICE**

Engine damage hazard.

- Trimming up the engines wihout paying attention to surrounding objects may cause engine damage.
- Always make sure the engines can move freely without hitting any objects when they are raised.

## 4.4.4 Installing an engine

If installing a new engine, follow this installation specification.

**⚠ WARNING**

For the maximum permitted engine power and weight, check the builder's plate.

Do not exceed the maximum permitted engine power.

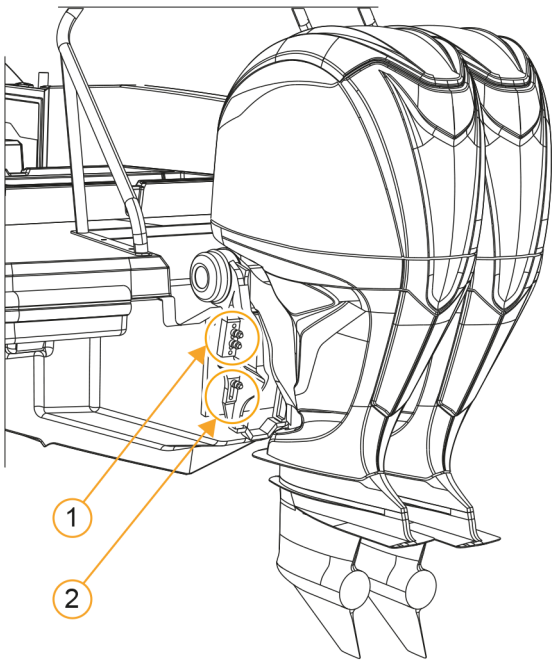


*Figure 4.8 Engine installation*

1. Upper fastening bolts
2. Lower fastening bolt


© 2025 QUARKEN BOATS / QUARKEN LTD

The upper fastening bolts must be installed to the second and fourth fixing holes, counting from top.

The lower fastening bolt must be installed as high as possible in the mounting bracket.

# 4.5 Navigation system

In addition to the mandatory navigation lights, you can equip your boat with additional navigation aids that further enhance your and your crew's safety.

The navigation equipment is controlled from the steering console. For the control locations, see sections *4.3.2 Equipment controls on page 43* and *4.3.3 Function control panel on page 44.*

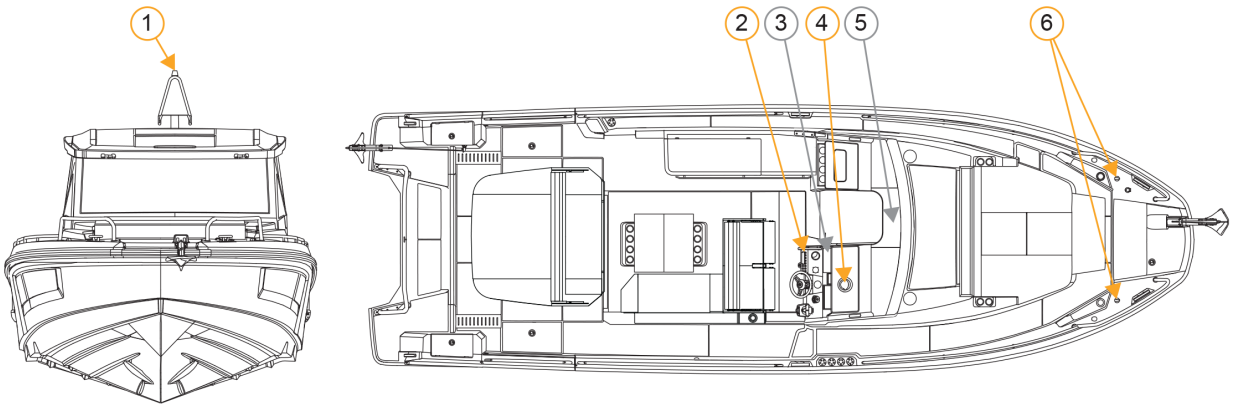


*Figure 4.9 Navigation system components*

1. Anchor light mast
2. Function control panel for navigation lights and anchor light
3. Chartplotter display for add-on software*
4. Compass
5. Sonar sensor*
6. Navigation light

* Optional

## 4.5.1 Navigation lights

Your boat is equipped with front navigation lights and an anchor light. The panel light ensures the visibility of the function panel keys in the dark.

The light switches are located on the function control panel at the steering console.

You must always have the navigation lights and anchor light on when travelling in the dark.


© 2025 QUARKEN BOATS / QUARKEN LTD

Inspect the navigation lights regularly and replace broken lights as soon as possible.

- Do not add lights that could diminish the visibility of the standard navigation lights.
- Do not modify the navigation lights or use plug-in navigation lights.

#### Troubleshooting

If the navigation and anchor lights do not work:

1. Verify that the Service main switch is turned on.
2. Check the fuses on the main switch panel.
3. Change the bulb if broken.

The locations of the main switches and fuses are described together with the electrical system.

## 4.5.2 Chartplotter displays

Your boat can be equipped with software for add-on applications. These can be used via the boat's chartplotter displays.

Available optional add-on applications:

- Garmin chartplotter with GPS and a sonar system.
- Automatic identification system (AIS).
- Radar.
- Choice of one or two displays. If you have opted for both chartplotter displays, you can view two different applications simultaneously.
- Garmin manuals and this Owner's manual.

See the manufacturer's manual for instructions for use.

#### Maintenance

The fuses for the displays are the plotter regular fuses, which are located on the main switch panel.

## 4.5.3 GPS and sonar system

You can select a Garmin chartplotter with a GPS navigation and sonar system as an accessory. Note that the chartplotter does not include maps as standard.

**⚠ CAUTION** Always keep a compass and an up-to-date chart on board, even if you have a chartplotter. A GPS supports navigation, but it should not be used as primary means of navigation.

**⚠ CAUTION** At higher speeds, the sonar sensor may not display accurate measurements.

See the manufacturer's manual for instructions for use and care.


© 2025 QUARKEN BOATS / QUARKEN LTD

**Maintenance**

Have the sonar sensor liquid checked in connection with regular servicing. The sonar sensor is located inside the hull (see diagram in section *4.5 Navigation system on page 47)*.

## 4.5.4 Automatic identification system AIS

The automatic identification system (AIS) is an automatic tracking system designed to avoid collisions at sea. It discovers other vessels and makes your vessel visible to other seafarers in poor visibility and weather conditions.

The AIS is an optional module. The user interface is integrated into the chartplotter.

For instructions for use, see the manufacturers' manuals.

## 4.5.5 VHF marine radio

VHF marine radio is an international very high frequency (VHF) band communication channel for two-way voice communication between vessels.

VHF marine radio is available as an optional feature for your boat.

You can choose AIS as an additional module to the VHF radio. The AIS user interface is integrated into the chartplotter.

The VHF protocol is a worldwide system with local regulations for use. For example, in many countries, a VHF radio license is required.

For instructions for use, see the manufacturers' manuals.

## 4.5.6 Radar

Radars increase safety by helping you detect objects on the water, and avoid collisions in conditions with poor visibility.

A radar is available as an optional module integrated into your chartplotter.

## 4.5.7 Compass

A compass is available as a standard feature.

**NOTICE**

The compass readings are not exact as electronic devices always cause interference.

Have your compass calibrated once a year or be aware of the level of deviation specific to your compass.


© 2025 QUARKEN BOATS / QUARKEN LTD

# 4.6 Other control system features

In addition to the engine and navigation system controls, your boat's steering console provides extensive functionality for the other equipment on the boat.

For the control locations on the steering console, see sections *4.3.2 Equipment controls on page 43* and *4.3.3 Function control panel on page 44.*

## 4.6.1 Bow thruster

Your boat may have a bow thruster as either a standard or optional feature. The bow thruster makes the boat easier to maneuver by providing lateral thrust when docking.

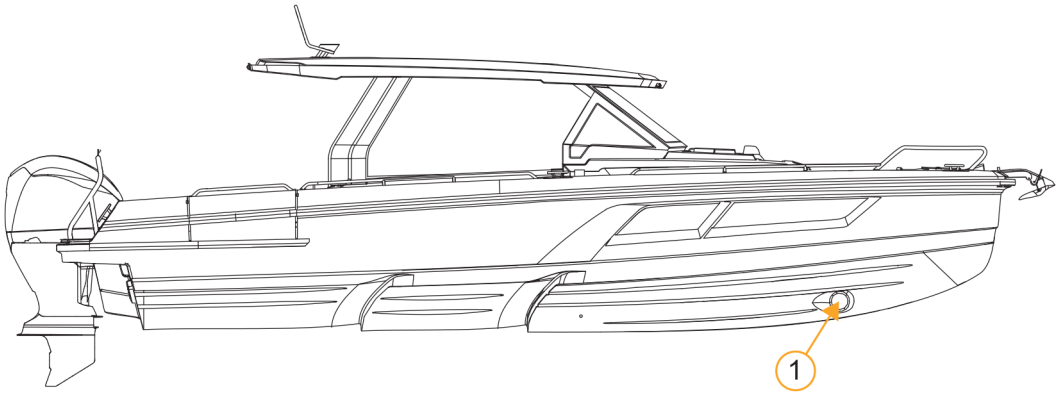


*Figure 4.10 Bow thruster*

1. Bow thruster

### Using the bow thruster

To use the bow thruster:

- Turn the power on from the bow thruster switch on the main switch panel, and then from the joystick on the steering console.
- For further instructions for use, see the manufacturer's manual.

**⚠ WARNING** Incorrect use may cause the bow thruster to overheat and shortcircuit.

- Use the equipment only for short periods at a time.
- Do not exceed the maximum amount of use indicated in the manufacturer's manual.

**⚠ WARNING** Do not touch the bow thruster if the Aux switch on the main switch panel is turned on.

### Troubleshooting

The bow thruster unit is located under the front cabin beds. There is no need to access it in normal use. In case of a problem, always contact a professional boat service.


© 2025 QUARKEN BOATS / QUARKEN LTD

The device is connected to a heavy-duty fuse. In case of fuse overload, check the functioning of heavy-duty fuses from the holes in the fuse covers. If the metal strip inside is damaged, the fuse is tripped.

**⚠ WARNING** Changing tripped heavy-duty fuses yourself poses a risk of electric shock and serious injury.

- Do not change a tripped fuse yourself but contact a qualified nautical electrician.
- Even opening the cover is not recommended. If it is necessary to open the cover, make sure that all the current cables from the batteries are disconnected.

For more information, see the manufacturer's manual.

## 4.6.2 Trim control system

You can use the trim control system to adjusting the running angle of your boat. While the Yamaha engine power trim provides powerful vertical trimming capability, trim tabs provide additional control of the horizontal angle of the boat while under way.

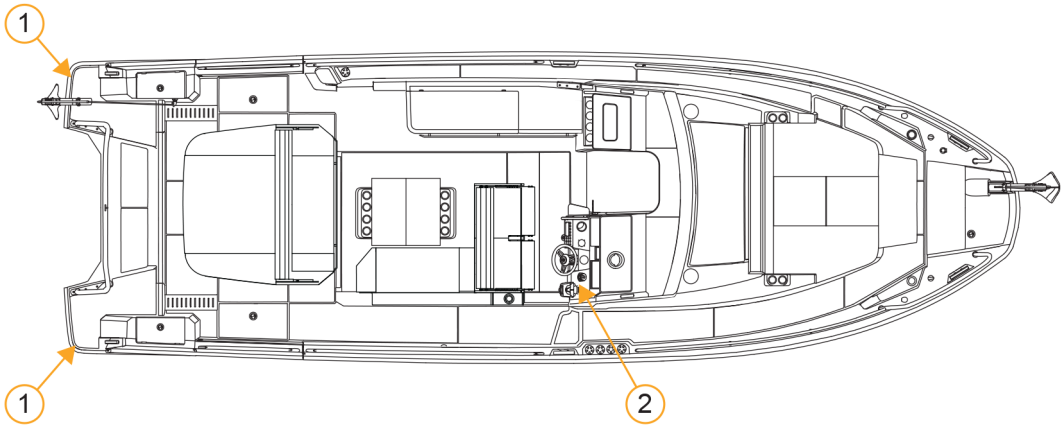


*Figure 4.11 Trim tabs*

1. Trim tabs
2. Control unit

### Using trim tabs

Trim tabs provide additional heeling and horizontal tilting control. Situations where trim tabs are especially useful are:

- When you need to trim the bow down in a rising sea.
- When accelerating to cruising speed.
- When running with a strong beam wind.

The control options from the control unit are:

- Port up/down
- STB (starboard) up/down.


© 2025 QUARKEN BOATS / QUARKEN LTD

For more detailed instructions on how to use the trim tabs, read the manufacturer's manual. Read also the engine manufacturer's instructions on adjusting the vertical angle.

**⚠ WARNING**

Trim tabs can change the boat's behaviour radically if not used correctly.

- Adjust them carefully at high speeds.
- Do not drive with the bow too low as this may cause the boat to turn unexpectedly.

**⚠ CAUTION**

- The boat's two-stepped hull construction affects the boat's driving characteristics and the trim. Read more in section *6.3 Driving and navigating on page 73.*
- Trim tabs do not work at speeds below 10 kn.

## 4.6.3 Anchor windlass

Anchor windlasses are available as an optional accessory. They help you raise or drop the anchor quickly, easily, and reliably. You can opt for one or two windlasses. Anchors are included with the windlasses.

**⚠ WARNING**

If the anchor windlass releases while the boat is moving, it can cause substantial damage to the boat, crew and other people.

Always fasten the anchor windlass mechanically in place to prevent it from releasing while the boat is moving.

***NOTICE***

The anchor windlass has no automated stopping mechanism. The anchor must be able to move freely to avoid damaging the boat.

Make sure the anchor is always in your line of sight when lifting it.

Once the anchor is in place, make sure not to over-tighten the rope.


© 2025 QUARKEN BOATS / QUARKEN LTD

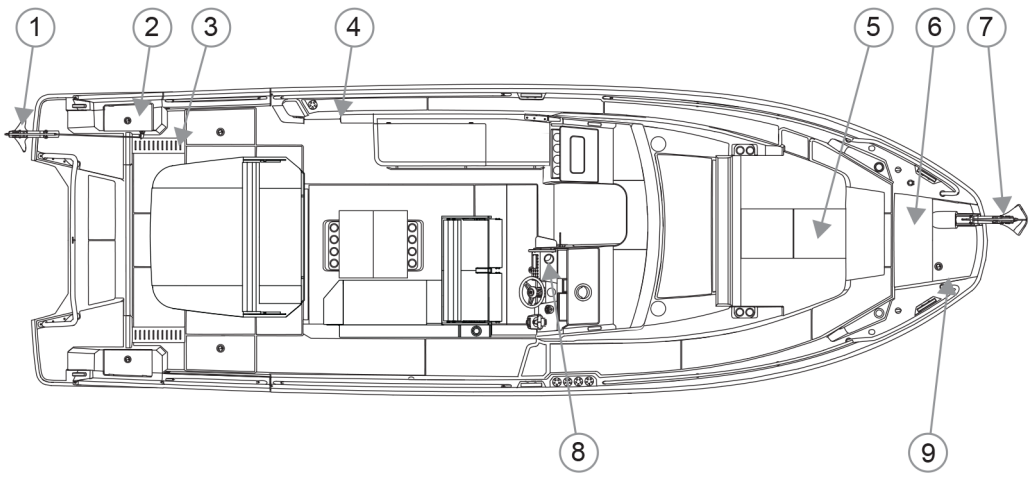


1. Aft anchor
2. Aft anchor winch
3. Aft anchor winch fuse and battery (under deck)
4. Battery switch for anchor winches
5. Bow anchor winch fuse and battery (under front cabin bed)
6. Bow anchor winch
7. Bow anchor
8. Remote control for the switch for aft anchor winch
9. Control switch for bow anchor winch

### Using anchor windlasses

The chain or rope must be the correct type for the windlass. For the recommended anchor chain or rope type, see section *9.2 Technical specifications on page 80.*

To activate the anchor windlasses, turn power on from the bow thruster main switch on the main switch panel.

- You can operate the aft anchor windlass on the steering console or with the remote control.
- To operate the bow anchor windlass, use the buttons located in the bow anchor storage space.
- For more detailed instructions for use, see the manufacturer's manual.

### Troubleshooting

The device is connected to a heavy-duty fuse. In case of fuse overload, check the functioning of heavy-duty fuses from the holes in the fuse covers. If the metal strip inside is damaged, the fuse is tripped.


© 2025 QUARKEN BOATS / QUARKEN LTD

**⚠ WARNING**

Changing tripped heavy-duty fuses yourself poses a risk of electric shock and serious injury.

Do not change a tripped fuse yourself but contact a qualified nautical electrician.

Even opening the cover is not recommended. If it is necessary to open the cover, make sure that all the current cables from the batteries are disconnected.

For more information, see the manufacturer's manual.

## 4.6.4 Recreational lights and audio system

### Recreational lights

Depending on your selection of optional features, your boat may be equipped with the following lights.

- Driving lights
- Court lights
- Deck lights
- Roof lights
- Working lights
- Underwater lights
- Ambient lights

The control buttons for these are located on the function control panel, if you have selected these features.

### Audio system

A Hi-fi audio system is available as an option. Depending on the options you choose, the boat can also be equipped with an amplifier. You can control the audio system from the steering console, or from the front cabin. It can also be used from the chartplotter display, if you have selected this optional feature.

See the manufacturer's manual for instructions for use.

## 4.6.5 Windshield wipers, horn and device chargers

Your boat is equipped with two windshield wipers, screen washers and a horn. The control buttons for these are located on the function control panel.

If no fluid comes out when pressing the control button for the windshield wipers, the windshield washer fluid reservoir must be topped up. It is located on the port side of the aft storage space.

The steering console has a wireless charging platform for phones with that feature.

In addition, there is a twin USB charging plug for phones and other devices on the passenger side. Plugs are also situated next to front cabin bed.


© 2025 QUARKEN BOATS / QUARKEN LTD

# 4.7 Hull and superstructure openings

Your boat has a number of openings where water can get in or out. These require your attention during use in order to prevent water ingress and to ensure passenger safety.

The following diagrams indicate the location of these openings in the hull and superstructures (areas above the deck).

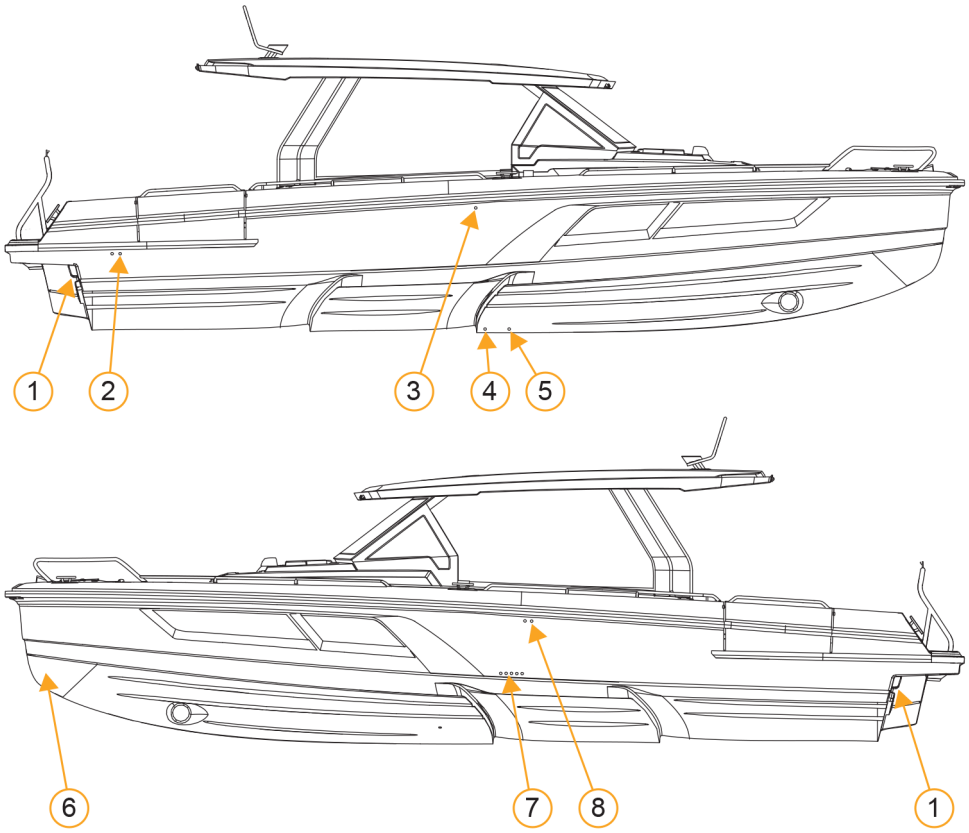


*Figure 4.12 Hull openings*

1. Deck draining
2. Bilge pump drain holes
   - Aft automatic bilge pump
   - Manual bilge pump
3. Gasoline fuel tank ventilation opening
4. Septic tank drain hole equipped with seacock
5. Toilet flush water inlet equipped with seacock
6. Anchor box draining


© 2025 QUARKEN BOATS / QUARKEN LTD

7. Drainage holes
    - Shower pump
    - Toilet sink
    - Galley sink
    - Front automatic bilge pump
    - Wet bar sink
8. Exhaust and ventilation
    - Heater and stove exhaust*
    - Diesel tank ventilation*
    - Septic tank ventilation
    - Fresh water tank ventilation
    - Grey water tank ventilation

* Optional

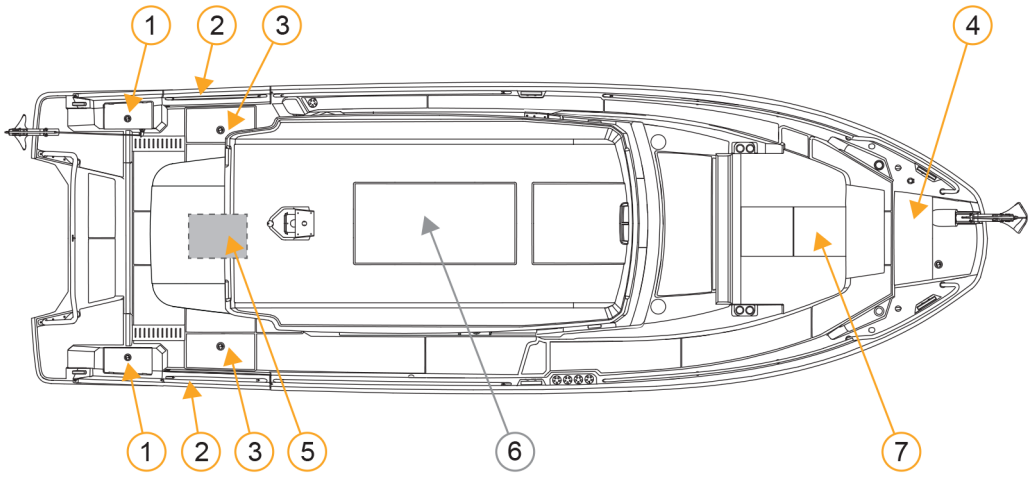


*Figure 4.13 Hatches - top view*

1. Aft anchor storage hatch
2. Side terrace
3. Cockpit side hatch
4. Bow anchor storage hatch
5. Cockpit mid hatch
6. Sky window
7. Deck hatch


© 2025 QUARKEN BOATS / QUARKEN LTD

### 4.7.1 Preventing flooding

To minimize the amount of water getting into the boat:

- Always check that the hatches are tightly closed before and after using the boat. It is recommended that you keep them closed when under way.
- Keep windows, doors and hatches closed in rough waters and bad weather. You may keep them open in calm weather.
- Close canopies, hatches and other openings, if water is sprayed inside through them. This can sometimes occur in certain conditions due to negative pressure or at certain speeds.

**⚠ WARNING**

The boat can sink if enough water gets into the bilge through the hatches.

Always keep the bilge inspection hatch closed when the boat is in water.

**⚠ CAUTION**

Risk of personal and material damage.

The windows, doors, and deck hatches are not designed to sustain pressure from rough waters and bad weather. They can cause injuries if they break or are shut with force.

Always make sure they are tightly closed when underway. You may keep them open in calm weather.

### 4.7.2 Maintaining hull openings

- Check annually the functioning and leakage of the seacocks.
- Check through-hull fittings annually.
- Test the opening and closing function of the seacocks every month.
- Check leakages from inside the hull every time before the boat is setting off.

### 4.7.3 Using side terraces

The boat is equipped with foldable side terraces that can be used while the boat is stationary. The side terraces provide additional seating space and a larger sociable area.

Push the button on the center of the side terrace to unlock the fastning mechanism and fold down the terrace.

Side terraces must be closed for stability when the boat is moving.

**⚠ WARNING**

Safety hazard.

Never drive the boat with the side terraces in the folded down position.

The side terraces can only be in the folded down position while the boat is stationary.


© 2025 QUARKEN BOATS / QUARKEN LTD

**⚠ WARNING**

Safety hazard.

The maximum weight capacity of each side terrace is 200 kg (440 lb).

Do not exceed the weight limit.

# 4.8 Draining system

Your boat's draining system consists a self-draining system, automatic bilge pump system and a manual bilge pump.

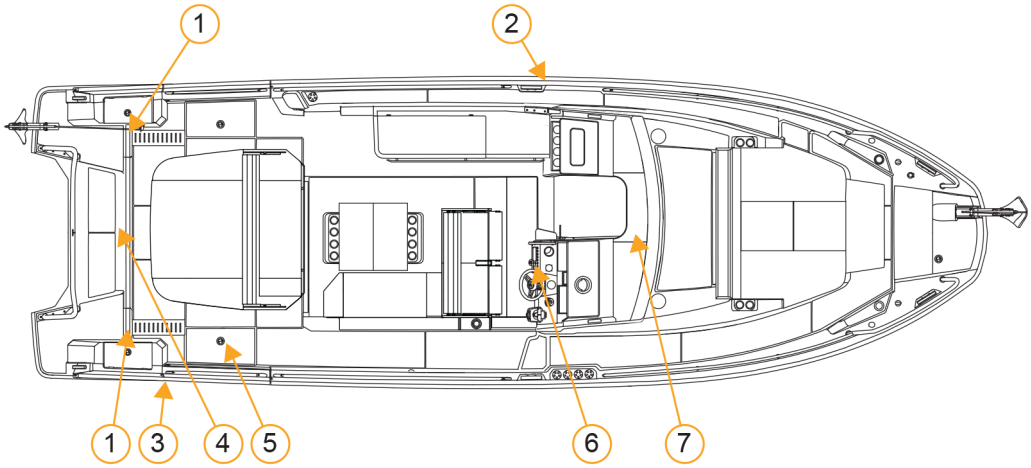


*Figure 4.14 Draining system*

1. Deck draining
2. Front bilge pump drain holes
3. Aft bilge pumps drain holes
4. Aft bilge pump and suction point of the manual bilge pump
5. Handle of the manual bilge pump
6. Switch for electric bilge pumps
7. Front bilge pump

## 4.8.1 Self-draining system

Your boat is equipped with a self-draining system for the deck. The drain holes for water coming from rain, splashing or breaking waves are directly connected to the sea.

***NOTICE***

Risk of material damage.

Some of the water and condensation from the deck may end up in the bilge and cause damage to the components over a long period of time, if not removed.

See the description of the bilge pump system for more information.


© 2025 QUARKEN BOATS / QUARKEN LTD

**⚠ CAUTION**

The drain holes must be open at all times.

Do not block the drain holes.

Remove any accumulated debris regularly to prevent clogging.

## 4.8.2 Bilge pump system

The bilge pump system consists of two electric pumps, one in the front and one in the back of the boat. Additionally, there is a manual bilge pump.

The electric bilge pumps are equipped with a float for detecting water in the bilge space. The pumps are activated and pump out water as required. There is an alarm when the pumping starts. You can also control the pumps from the steering console.

The manual bilge pump serves as additional safety equipment in case the electric bilge pumps are broken or there is no electricity. You need to attach the removable handle to the manual pump before using it. The handle is located next to the manual pump.

Make sure you know how to use all of the pumps before using the boat.

### Using the bilge pumps

**⚠ WARNING**

The combined capacity of the bilge pumps is not designed to pump out the boat in the event of hull damage. See section *9.2 Technical specifications* *on page 80* for details about pump output capacity.

In case of rapid water accumulation, call rescue service.

***NOTICE***

Risk of material damage.

The boat's two-stepped hull structure allows water to build up over a long period of time and can cause damage to the components, if not removed.

- Check the bilge area always before using the boat.
- Do not leave the boat unattended in the water for more than two weeks at a time.
- Activate the electric pumps from the steering console if necessary.

The pumps can break if run dry for a long time.

- Make sure you stop the pumps when the bilge is empty.

### Maintenance

Normally there is no need to use the bilge pumps as the system is fully automatic. However, to ensure that there is no water build-up in the bilge, regularly check the aft storage space, fuel tank space and under the front cabin floor.

**⚠ CAUTION**

As as safety precaution:

- Check the functionality of the bilge pumps regularly.
- Remove any debris from the suction points.


© 2025 QUARKEN BOATS / QUARKEN LTD

You can access the electric bilge pumps and the suction points from the fuel tank space.

**NOTICE**

If you are leaving the boat docked for a long time without connecting it to shore power, the boat's bilge pump batteries may run empty. As a result, water can build up in the bilge and cause damage to components.

Do not leave the boat unattended in the water for a long time. It is recommended that you check, approximately every two weeks, that:

- There is no water in the bilge.
- The bilge pumps are working.
- The boat's floating position is level.

**NOTICE**

Environmental hazard! Contaminants may end up in the bilge and waterways.

- Check the bilge water regularly for contaminants, such as oil, diesel, and glycol.
- Do not pump water into the sea if it is not clear. Use a separate container and discard as contaminated waste.

## 4.9 Freshwater system

Your boat is equipped with a freshwater system. The freshwater system consists of a freshwater tank, automatic pump and water taps in the pantry and toilet. You can choose to equip your boat with a water heater system as an option.

**⚠ CAUTION**

Safety hazard.

Using the water as drinking water is not recommended.

In the US, using the water as drinking water is not allowed, as the tank is not classified for drinking water.

**⚠ CAUTION**

Safety and material damage hazard.

The fresh water filling inlet may be located next to the fuel filling inlets or the septic waste suction fitting, depending on the features you have selected.

Do not mix up the different inlets. Make sure the caps to the inlets which you are not using are tightly closed when re-filling the freshwater or fuel tanks.

**NOTICE**

Risk of material damage.

Empty the freshwater tank fully before storing the boat at freezing temperatures.

Using anti-freeze products is not recommended.


© 2025 QUARKEN BOATS / QUARKEN LTD

**NOTICE**

Risk of material damage.

Do not let the freshwater pump run dry. The pump must always have water in it when turned on.

Turn it off immediately when the tank is empty.

**NOTICE**

Risk of material damage.

The water heater may break if used when the tank is empty and if the power is connected.

Switch the heater off if the tank is empty.

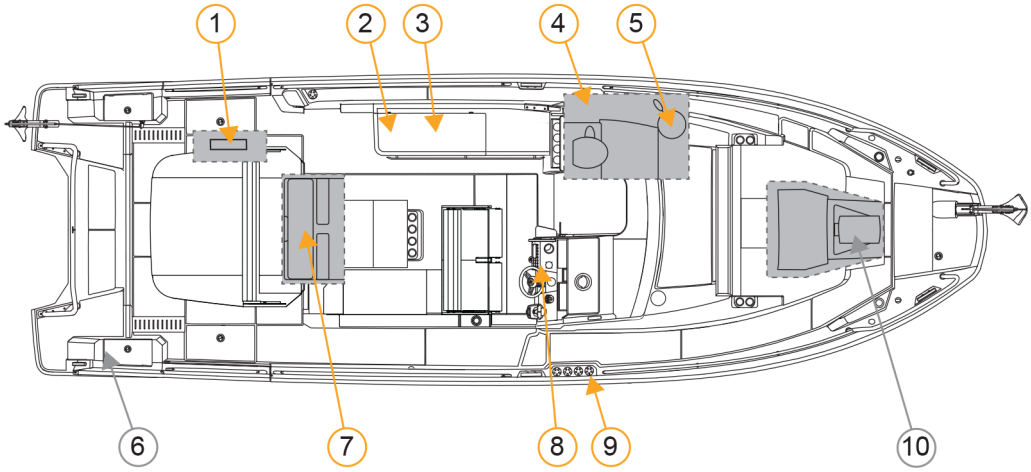


*Figure 4.15 Freshwater system*

1. Windshield washer fluid tank
2. Galley sink tap
3. Freshwater pump and splitbar
4. Shower
5. Toilet sink tap
6. Deck shower*
7. Freshwater tank
8. Freshwater pump switch
9. Fresh water filling inlet
10. Water heater*

*Optional

### Using the freshwater system

When filling the tank for the first time, If the freshwater pump fails to prime itself and start circulating water, contact your local retailer or boat service.

- Fill the tank from the water filling inlet fitting labeled "Water".
- Turn on the freshwater pump from the main switch panel.


© 2025 QUARKEN BOATS / QUARKEN LTD

- Keep the pump turned on as long as there is water in the tank.
- You can check the water level from the freshwater tank meter. When the tank is empty, turn the freshwater pump off from the main switch panel and refill the tank.
- The water heater only works when the shore power is connected.
    - While the shore power is connected, turn on the heater fuse switch from the shore power main unit.
    - Connect the water heater cable to start the heater.
    - Always disconnect the heater and switch off the heater fuse swith when the heater is empty or not in use.
    - You can adjust the water temperature from the heater thermostat.

Consider that you may not be able to fill up the freshwater tank if the boat is not level. The trim and how the boat is loaded affect the tank capacity. Always add an extra 20% reserve to the expected fresh water consumption for the trip.

**Maintenance**

- Check and clean the pump filter regularly. The filter is located next to the pump.
- Check and clean the tank with water once a year. You can access the tank from the hatch below the front cabin bed.

## 4.10 Septic system

Your boat is equipped with a toilet, shower and collection system for septic waste.


© 2025 QUARKEN BOATS / QUARKEN LTD

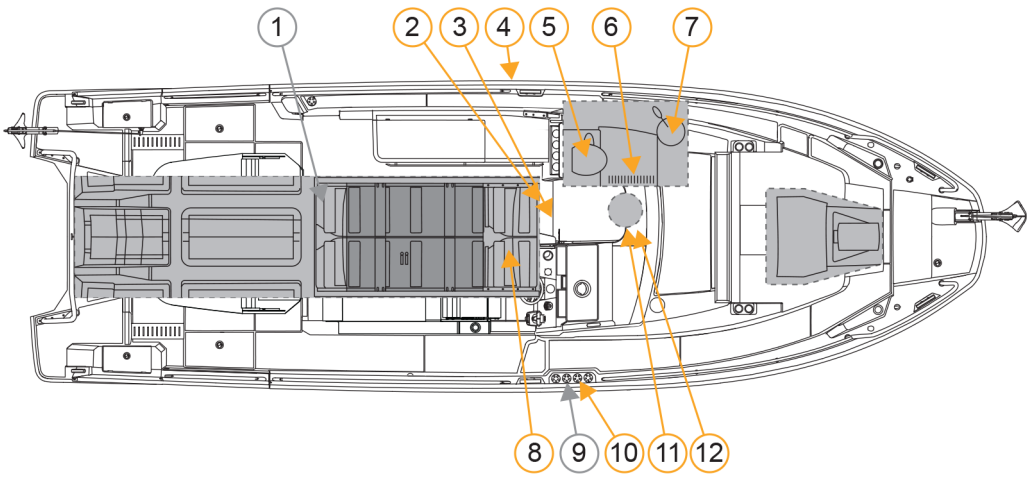


*Figure 4.16 Septic system components*

1. Grey water tank*
2. Shower floor draining pump
3. Manual septic pump
4. Shower pump drain hole through hull
5. Toilet
6. Shower floor draining
7. Toilet sink
8. Septic tank
9. Grey water tank suction fitting*
10. Septic tank suction fitting
11. Septic tank drain hole equipped with seacock
12. Toilet flush water inlet equipped with seacock

*Optional

In some countries, there is no septic seacock and the fresh water is directed to the septic tank.

In some countries, the boat is equipped with a grey water tank. The grey water tank collects the waste water from the sinks and the shower.

## 4.10.1 Using the septic system

The toilet is powered by electricity and uses seawater for flushing.


© 2025 QUARKEN BOATS / QUARKEN LTD

**Using the toilet**

1. Open the tap of the toilet flush water inlet seacock.
2. Flush the toilet from the flush button.
3. Close the seacock tap after use.

It is recommended that you always keep the toilet flush seacock tap closed when toilet is not in use.

**NOTICE**

The toilet can easily get clogged and damaged.

- Never put any other objects but toilet paper in the toilet.
- Do not under any circumstances flush down paper towels, fabric, hard objects, rubber, oil or solvents.
- Do not pour hot water into the toilet.

**NOTICE**

Environmental hazard! The sink is directly connected to the sea.

Do not pour soap or any other substances harmful to the environment down the sink.

**Maintenance**

- Flush the toilet system thoroughly with fresh water when the boat is not in use.
- Before the boat is laid up for winter storage, clean the whole system and flush it through while the boat is still in the water.
- To prevent frost damage, bacteria growth and smells, drain the system thoroughly when lifting the boat out of the water.

**NOTICE**

- The use of antifreeze is not recommended.
- If you use chemicals cleaning the septic tank, make sure they are suitable for aluminum.

## 4.10.2 Septic waste disposal

The contents of the toilet empty out into the septic tank located under the deck. You can monitor the level of the tank from the engine multi-function panel.

To empty the septic tank into a permanent septic tank ashore:

1. Make sure the seacock taps in both the septic seacock and toilet flush water seacock are closed.
2. Attach a suction hose from the shore tank to the suction fitting labeled “Waste”.
3. When the hose is tightly in place, turn on the pump of the septic tank on the shore.


© 2025 QUARKEN BOATS / QUARKEN LTD

4. Press the suction hose tightly against the fitting during suction to prevent any septic waste from spilling onto the deck and the hose.
5. When finished, close the cap of the suction fitting and put the hose back in place.

**⚠ CAUTION**

The septic waste suction fitting maybe located next to the fuel or fresh water filling inlets, depending on the features you have selected.

Do not mix up the different inlets.

Ensure that the caps to the other inlets are tightly closed when emptying the septic tank.

***NOTICE***

Environmental hazard! Do not empty the septic tank into the sea. It is against the law in many countries and against good seamanship practice. In order to have the toilet usable at all times:

- Constantly monitor the level of the septic tank from the engine multi-function panel.
- Plan your trip well with the locations of shore septic services in mind.

In an unavoidable situation, the septic tank can be emptied straight into the sea with the septic pump (not available in some countries).

To empty the tank:

1. Open the seacock tap.
2. Pump with the handle of the manual septic pump until the tank is empty.
3. Close the seacock tap when finished.

# 4.11 Other fixtures and fittings

## 4.11.1 Shower

Your boat is equipped with a shower in the toilet compartment.

The water is drained from the shower floor to the draining pump and automatically pumped out into the sea. The pump unit is in a draining box and located under the front cabin stairs.

### Maintenance

Check the shower pump once a month.

- Make sure the pump starts running when water is drained from she shower.
- Check the pump filter. Clean or replace the filter if necessary.

## 4.11.2 Heater

You can choose to equip your boat with a diesel heater as an optional extra.


© 2025 QUARKEN BOATS / QUARKEN LTD

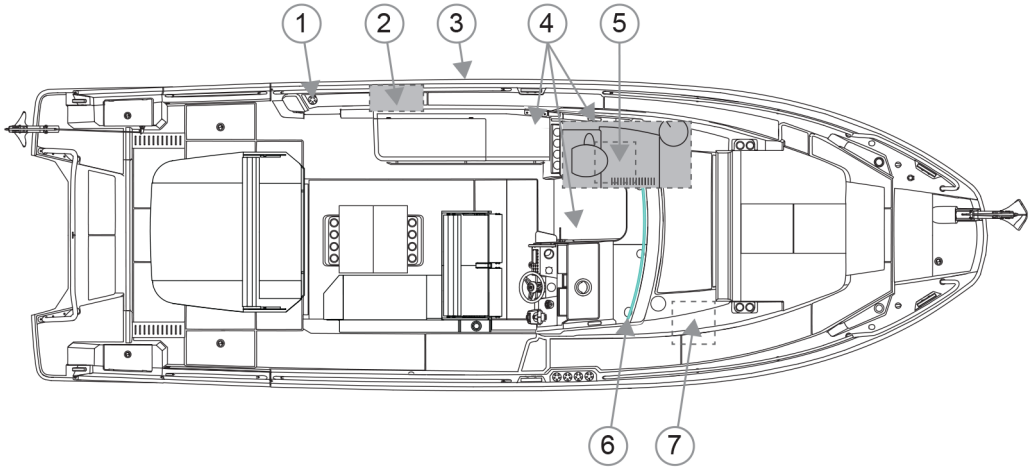


*Figure 4.17 Heater components*

1. Diesel fuel filling inlet
2. Heater
3. Heater exhaust
4. Cockpit warm air outlets
5. Toilet warm air outlet
6. Windshield blowing duct
7. Heater control unit

### Using the heater

Turn the heater on from the heater control unit. For instructions for use and maintenance, see the manufacturer's manual.

**⚠ WARNING** Risk of fire and carbon monoxide poisoning.

- Before turning the heater on, check that the warm air outlet is open and the heater's exhaust pipe is not covered or touched by anything.
- Do not fasten fenders to the middle cleat or cover the exhaust pipe with anything.
- Ensure good ventilation to avoid breathing in discharge of toxic combustion from the diesel fuel.
- Never leave the boat unattended when the heater is in use.
- Do not switch off the heater's direct supply current on the main switch panel before you have made sure that the appliance has cooled down.

## 4.11.3 Wet bar

The wet bar has a sink and compartments for garbage and storage. Depending on the boat model and selected accessories, it can also include a cooker or a grill and a freshwater tap.


© 2025 QUARKEN BOATS / QUARKEN LTD

**⚠ CAUTION**

Do not close the top cover before the cooker or grill has cooled down.

Always keep the top cover closed when underway.

## 4.11.4 Driver's seat

Your boat is equipped with a double seat for the driver and front passenger.

The seat has electronic height adjustment. To adjust the height, use the switch located below the trim tabs control unit.

Additionally, you can transform the seat into an L-shaped sofa in the cockpit, around the table. To do this, lower the seat to its lowest position and flip its foldable backrest forward.

## 4.11.5 Cooking appliances

You can choose to equip your boat with different cooking appliances. The appliances may be heated electrically, or by diesel or LPG.

**Using the cooking appliances**

**⚠ WARNING**

Risk of fire and carbon monoxide poisoning.

- Before turning on the any cooking appliances, check that the warm air outlet is open and the exhaust pipe is not covered or touched by anything.
- Do not fasten fenders to the middle cleat or cover the exhaust pipe with anything.
- Ensure good ventilation to avoid breathing in discharge of toxic combustion from the diesel fuel.
- Never leave the boat unattended while any cooking appliances are in use.
- Do not switch off the direct supply current on the main switch panel before you have made sure that the appliance has cooled down.


© 2025 QUARKEN BOATS / QUARKEN LTD

**⚠ WARNING**

The cooking appliances can be a potential fire hazard.

- Never make changes to your boat's electrical sytem or fuel system, or allow an unqualified person to make changes to any other system of the boat.
- Never fill the fuel tank or handle fuel when the engines are running.
- Never smoke or use a naked flame when handling fuel.
- Never keep fuel in canisters or containers under the deck.
- Never leave the boat unattended when cooker is in use.
- Do not allow curtains or other flammable materials to get in contact with the cooker or naked flames.
- Ensure that all ventilation ducts are free.
- A smell of fuel is a potential sign of leaking fuel.

Always open the cooker cover before usage. Make sure the cover stays open and is not accidentally slammed shut. After usage, let the coocker cool down before shutting the cover.

For further instructions, read the manufacturer's manual.

## 4.11.6 Furnishings

Your boat has been designed in a modular way so that you can arrange the sofas and tables in the large social areas in different ways.

The front cabin is equipped with beds and sofa for two people. There is also an option for a table.

The cockpit has seats for 8 people and an electrically operated table. The table controls are located on the aft wall of the galley.

There is also an option for 1-2 tables with 3 different mounting points in fore and aft decks.

There is a storage for the tables under aft deck heads.

For an up-to-date list of accessories, visit www.quarken.com or enquire more from your dealer.


© 2025 QUARKEN BOATS / QUARKEN LTD

# 5 Measures before and after use

## 5.1 Checks before setting off

The driver is responsible for safety on board. This checklist can help you ensure a safe and enjoyable trip for yourself and the passengers.

**Planning your trip**

- Check the weather forecast. Assess its suitability for the boat's design category and your own boating skills.
- Have a personal flotation device for each passenger.
- Make sure you have a chart of the area and a compass.
- Check that the weight, including luggage, passengers and fuel will fit within the allowed load.
- The maximum number of passengers allowed on board will not be exceeded.

**Safety checks before leaving**

- Everyone is wearing a personal flotation device.
- There are fire extinguishers and they have not expired.
- You have the necessary lines for mooring and an anchor.
- If there is a heater, there is sufficient ventilation and the heater exhaust pipe is not covered.
- Everyone on board has a clear understanding of the manouvering operations.

**Drainage and hatches**

- There is no water, fuel or oil leaks in the bilge.
- The bilge pumps work.
- Deck draining system is clean and the seacocks are open.
- All deck hatches are tightly shut.
- The drain plug on the bilge drain hole is closed (in US only).

**Equipment and fuel**

- All the lines and fenders are well fastened on the inside of the boat.
- The load is well distributed and heavy items are well secured low down.
- All loose equipment is well fastened, including lightweight items.
- There is enough fuel for the trip and an adequate amount of reserve fuel in case of bad weather or change of plans.
- There is no water in the fuel filter.
- There is enough diesel fuel, if you have a heater.


© 2025 QUARKEN BOATS / QUARKEN LTD

### Engine and electrical system

Before starting the engines:

- Check that the engines and propellers are free to move and rotate.
- Turn on the start, service and bow thruster main switches.
- Check that all the fuses are working.
- Check the functioning of the steering system.
- Remove the cable from the shore power supply.
- If the boat has an engine shut-off switch, attach it to yourself.

After the engines have started, check that the engine cooling water flows correctly.

### Navigation system

Turn on and check the functioning of:

- The navigation lights and anchor light. If it is dark, turn them on.
- The navigation equipment.
- The bow thruster.

## 5.2 After using the boat

This checklist helps you remember some of the important things when returning from a trip.

### Mooring

- The boat is fastened correctly.
- There are at least three fenders on each side of the boat.
- The stern of the boat is not facing an open body of water.
- You consider the changing tide and weather conditions.

### Drainage and hatches

- The seacocks of the septic tank and toilet are closed.
- The drain holes are not blocked and the deck drainage works properly.
- All deck hatches, windows and doors are closed tightly.
- The bilge has no water in it.

### Power and devices

- Turn the engines off.
- Turn off all the equipment from the steering console.
- Turn off the main switches if you leave the boat for longer than one hour.
- Ensure that direct supply switches are switched on.
- Check that the bilge pumps work.
- If you have shore power, connect the boat to a shore power system.


© 2025 QUARKEN BOATS / QUARKEN LTD

# 6 Handling your boat

This section does not provide general instructions on how to handle a boat. It is your responsibility as the owner or driver of the boat to ensure that you have the necessary skills for handling the boat. If needed, your dealer or local yacht clubs can help you find a suitable course.

## 6.1 Lifting

Local restrictions may apply. Check the regulations specific to your area. For exact dimensions, see section *9.2 Technical specifications on page 80.*

It is not recommended to to use a trailer for regular transport of the boat. A suitable trailer can be used for storage of the boat.

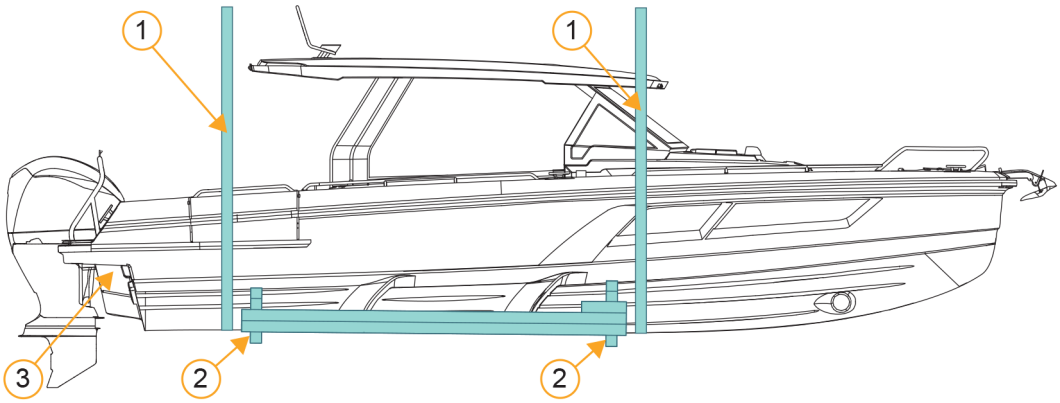


*Figure 6.1 Location of lifting supports*

1. Lifting strap locations
2. Cradle location
3. Fastening eye

Commission only a reputable lifting company or a boatyard with sufficient lifting capacity to lift the boat. Pay attention to the following:

- Always keep the engines up when lifting or trailering the boat.
- Consider the boat's load capacity and use a sufficiently steady and suitably sized trailer.
- Make sure the trailer's side supports carry the majority of the boat's weight and there is no local weight impact.
- Place the trailer side supports approximately 10 cm in front of the straps and make sure that the boat does not sway sideways


© 2025 QUARKEN BOATS / QUARKEN LTD

**⚠ WARNING** Do not stay under the boat when it is hanging from the crane.

**⚠ CAUTION** Do not use aft cleats when fastening the boat to a trailer. The end covers of the rub rail can break from the fastening straps under pressure. Use the fastening eyes in the bow and the hooks in the aft.

***NOTICE*** The stepped hull has sharp edges which can easily get damaged. Handle the boat with care:

- Make sure the lifting straps do not slip into the grooves of the stepped hull.
- Use a multi-roller trailer.
- Do not push the boat into the water. Always bring the trailer far enough into the water so that the boat floats freely before releasing it.

***NOTICE*** The boat's frame cannot sustain pressure from straps squeezing into the structure.

- Always use a lifting frame wider than the width of the boat.
- Never attach the strap ends to one hook.
- Make sure the straps do not touch the roof structure. Do not lift the boat from its roof.

***NOTICE*** The fastening eye is not designed to resist strong lateral forces.

Do not use the fastening eye for mooring. Only use it for trailering.

## 6.2 Stability and loading

Your boat meets the highest standards for stability thanks to its hull design and weight distribution. However, stability may be compromised by:

- Weather conditions beyond your boat's design category and your own boating skill level. High breaking waves always represent a serious danger to stability. In rough weather, keep all hatches and doors closed to minimize the risk of flooding.
- Freely moving water in the bilge. Keep the amount of bilge water to a minimum.
- Towing or being towed.
- Any change to the boat’s centre of gravity, such as imbalances in weight distribution, weight in a high position, or a new engine type.

Make sure you understand and consider these risks.

The boat manufacturer disclaims any liability for the consequences of unauthorized modifications or inappropriate use of the boat.


© 2025 QUARKEN BOATS / QUARKEN LTD

**⚠ WARNING**

The boat can sink if the stability or load limits are compromised.

- Never exceed the maximum recommended number of persons on the boat.
- Always have your crew use the seats intended for passengers.
- Make sure that, regardless of the number of persons on board, the total weight of the persons on board and their luggage never exceeds the maximum load capacity of the boat.
- Always load the boat carefully and distribute loads appropriately to maintain the design trim. Avoid placing heavy weights high up.

The maximum number of people and the load capacity are indicated on the Builder's plate located by the steering wheel. These values are also included in the description of the technical specifications.

The designated seating areas are given in the diagram in section *2.5.1 Designated seating and moving areas on page 20.*

# 6.3 Driving and navigating

As the driver of the boat, you are responsible for ensuring that you and your crew take safety seriously. This includes:

- Acquiring the necessary boating and navigation skills before setting out to sea.
- Understanding the safety features and limitations of the boat.
- Behaving responsibly.
- Obeying the navigation rules of the International Regulations for Preventing Collisions at Sea (COLREG).

Carefully read section *2 Safety on page 8* for more details.

**Visibility**

The visibility from the steering position can be compromised due to:

- Trim and speed of the boat.
- Sea conditions or interior lights.
- Obstacles in the driver’s field of vision.

Always make sure that the visibility from the steering position is as good as possible:

- Make sure passengers sit in the designated seating areas. Place equipment and curtains so that they do not interfere with the visibility.
- Always adjust your speed to the circumstances and your surroundings. Do not drive continuously on the edge of planing speed.
- Use windscreen wipers when necessary.
- Use navigation lights in poor visibility and in the dark.
- Keep an eye on the stern for passing vessels, especially in ship fairways.


© 2025 QUARKEN BOATS / QUARKEN LTD

### Trim and maneuvering

The running trim heavily affects both the handling characteristics and the fuel consumption of the boat.

The primary means of adjusting the vertical trim are the engines. You can also change the running trim by adjusting the trim tabs and the positioning of the crew.

The boat's two-stepped hull construction affects the boat's driving characteristics and trim behavior by creating air pockets between the hull and the water. This reduces friction, providing many benefits:

- Better fuel economy.
- More comfortable ride with softer landing and less splashing.
- Consistent plane with improved visibility.
- Easier maneuvering at any speed.

Get to know your boat's driving characteristics.

## 6.4 Anchoring, mooring and towing

Only use the designated fastening points for mooring, towing, anchoring and water sports. Ensure that you have the required skills for handling the boat in these situations.

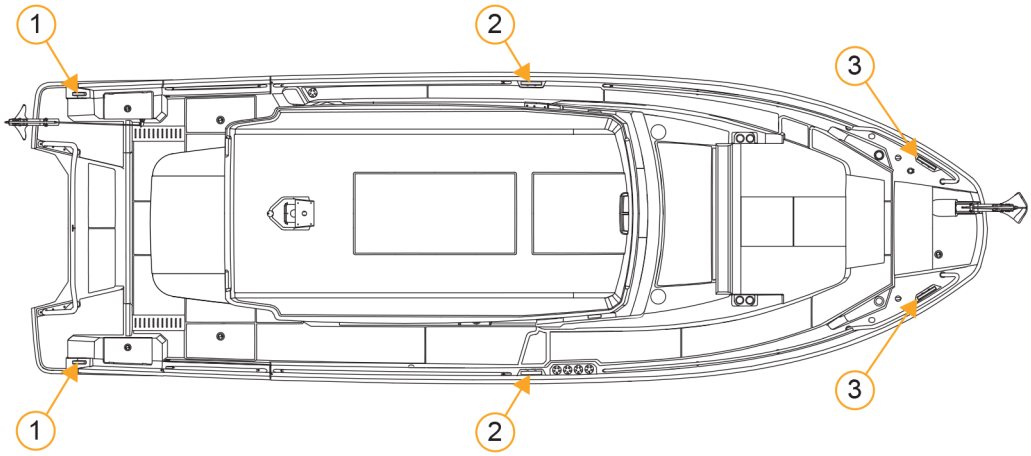


*Figure 6.2 Designated fastening points*

1. Rear cleats
2. Middle cleats
3. Front cleats

It is the owner’s or operators responsibility to ensure that mooring and towing lines, anchor chain(s), anchor lines and anchor(s) are adequate for the boat's intended use.

The tensile strength of the lines and chains must not exceed 80% of the fastening point force rating.

The recommended line, chain and anchor types, and their strenght ratings are described in the technical specifications.


© 2025 QUARKEN BOATS / QUARKEN LTD

**NOTICE**

The fastening eye is not designed to resist strong lateral forces.

Do not use the fastening eye for anchoring, mooring or towing. Only use it for trailering.

**⚠ WARNING**

Never use the roof structure for anchoring, mooring or towing. The boat can capsize.

### Anchoring and mooring

For anchoring, use the rear or front cleats.

When mooring and attaching fenders, you may use any of the cleats. Have at least two fenders on each side of the boat. Make sure the fenders are big enough.

Never attach lines to the roof structure.

**⚠ CAUTION**

The boat has an open stern and can easily flood.

- Find a sheltered place in an inlet or behind a jetty.
- Make sure that the stern is not facing an open body of water.
- When reversing, make sure that the deck does not get flooded from the waves.

### Towing

When towing, use a sufficiently strong, floating towing cable.

- When towing another boat, use both rear cleats.
- When being towed by another boat, use both front cleats.
- Do not use the rear cleats for water sports. Only use the water ski pylon (optional accessory).

**⚠ WARNING**

Towing affects the stability of the boat. When towing or being towed:

- Drive slowly.
- Do not tie the line in a knot. Always tie the line so that it can be instantly released under load.
- Do not tie the line to the roof structure.

**⚠ CAUTION**

Do not exceed a speed of 10 knots when being towed or towing another craft.

**⚠ CAUTION**

When using the boat for water sports, you must understand your responsibilities and the risks involved.


© 2025 QUARKEN BOATS / QUARKEN LTD

# 7 Caring for your boat

## 7.1 Regular servicing and repairs

It is important to have your boat professionally serviced to ensure safety and the validity of the warranty. Using an authorized servicing company for regular maintenance and in fault situations ensures that your boat will serve you and give you pleasure for years to come.

- For minor maintenance tasks and repairs, see section *4 Operating your boat on page 29* in this manual, as well as the boat equipment manufacturers' manuals included in the Owner's bag.
- You can repair minor damages to the gelcoat of the hull or deck yourself. However, for a flawless result, a professional workshop is recommended.
- If the engines or some other equipment is damaged, contact the dealer or the component manufacturer.

**⚠ CAUTION**

Maintenance, repair and installation of electrical devices may pose a risk of electric shock.

- Always turn off the current from the main switch panel.
- When replacing an electrical device, make sure the new one is compatible with the voltage on your boat.
- Do not work on an energized AC system.

## 7.2 Surface maintenance

To keep the hull top sides and deck surfaces in a good condition:

- Wash and wax them regularly.
- Use mild polishing compounds to treat scratches.

To care for the hull bottom:

- Wash the bottom immediately after bringing the boat out of the water, so that dirt does not dry onto the surface.
- Paint the bottom with anti-fouling paint when necessary.

***NOTICE***

Strong solvents may damage the gloss of the gelcoat surface.

- Wash the surfaces with a special boat cleaning agent.
- Do not use silicon-based waxes.

***NOTICE***

Do not use substances harmful to the environment. Follow local regulations about acceptable cleaning agents, waxes and paints.

© 2025 QUARKEN BOATS / QUARKEN LTD

# 7.3 Winter upkeep

When preparing your boat for winter layup:

- Have it professionally serviced by an authorized boatyard.
- Empty and clean the septic and fresh water tanks. Leave the valves of the seacocks half open.
- If your boat is equipped with a water heater, empty the heater from the drain tap.
- If your boat is equipped with a shower, empty the pumping unit.
- Wash lines with fresh water.
- Remove the drain plugs.
- Charge the boat's batteries with a shore power charger or remove them for winter storage.
- Empty and clean the refrigerator inside. Turn on the vent function in the door of the refrigerator. Close the door and switch power off from the refrigerator. For more information, refer to the manufacturer´s manual.
- If your boat is equipped with an air conditioning, perform winterization preparations according to the equipment manufacturer's manual.

If you store your boat outdoors:

- Remove textiles and any equipment that may get damaged in the damp.
- Remove electrical equipment and spray the connections of the electrical wiring with a protective agent.
- Cover the boat so that snow cannot get into the boat. A suitable size for a tarp is 10 X 6 m.

**NOTICE**

The boat's surfaces can get damaged by the tarp ropes and heavy snow. Make sure that:

- The ropes do not touch the boat.
- The boat is well ventilated under the tarp.
- Snow does not accumulate on the tarp.


© 2025 QUARKEN BOATS / QUARKEN LTD

# 8 Considering the environment

Protecting the marine environment is a shared responsibility. This means not only following environmental regulations, but also behaving responsibly beyond the rules.

The International Convention for the Prevention of Pollution from marine vessels (MARPOL) prohibits the dumping of oil, plastic, solid waste and chemicals. Many countries have their own environmental regulations with hefty penalties for disobeying them.

Tips for complying with rules and for respectful behaviour:

- Waste disposal
  - Do not throw garbage and waste into the waterways or on the shore.
  - Do not pour soap or any other substances harmful to the environment down the sink.
  - Never pump the bilge contents into the sea, if the bilge water is not clear. Use a separate container and discard it as problem waste.
  - Do not empty the septic tanks into the water. Constantly monitor the level of the septic tank and plan your trip with the locations of shore septic services in mind.
- Avoiding spilling contaminants:
  - Check the bilge water regularly for contaminants such as oil, diesel, and glycol.
  - Take care not to spill fuel, oil, detergents and solvents into the water. Keep oil absorbent material on board at all times for use in case of a spill or leakage.
  - Do not overfill the tank. Make sure the fuel does not overflow into the sea from the fuel ventilation opening.
  - Do not use substances harmful to the environment when caring for your boat. Follow local regulations about acceptable cleaning agents, waxes and paints.
- Minimizing exhausts and disturbance:
  - Have your engines professionally serviced and run it at an economical speed.
  - To reduce fuel consumption and to avoid disturbing other people, do not idle or rev the engines unnecessarily.
  - Drive slowly to avoid erosion and disturbance caused by backwash from boat waves.


© 2025 QUARKEN BOATS / QUARKEN LTD

# 9 Reference

## 9.1 Terms and abbreviations

| Term/abbreviation/acronym | Definition |
|---|---|
| Aftdeck | Deck area in the rear part of the boat, social area |
| Bilge | Lowest point of the boat's inner hull |
| Bow | Front end of the boat |
| Foredeck | Deck area at the bow of the boat |
| hp | Horsepower, unit of engine power (1hp = 0.75 kilowatts) |
| Hull | Boat's frame |
| kN | Kilonewton, unit of force |
| kn | Knot, unit of speed in the nautical industry (1 kn = ca. 0.51 m/s or 1.15 mph) |
| LPG | Liquefied petroleum gas |
| Port | Left side of the boat |
| PFD | Personal flotation device |
| STB, starboard | Right side of the boat |
| Steering position | Driver's seat and steering equipment, helm station |
| Stern | Rear end of the boat |
| Superstructure | Areas above the deck; e.g. tables, seats, cabin, steering console |
| Transom | Vertical section at the stern of the boat |


© 2025 QUARKEN BOATS / QUARKEN LTD

# 9.2 Technical specifications

| General specifications | | |
|---|---|---|
| Boat model | Quarken 35 Sport Tourer/Grand Tourer | |
| Purpose of use | Recreational | |
| Design category | B - Offshore<br>C - Inshore | |
| Max number of passengers | Category B | Category C |
| | 10 | 12 |
| Engine | Yamaha F300 NSB2 or F350* twin outboard engines (*optional) | |
| Max engine power | 522 kW (700 hp) | |
| Number of beds | 2 + 1 | |
| Max speed | + 44 kn | |
| Material | Fiberglass | |
| Certification | See Declaration of Conformity | |
| Conformity to standards | See Declaration of Conformity | |


© 2025 QUARKEN BOATS / QUARKEN LTD

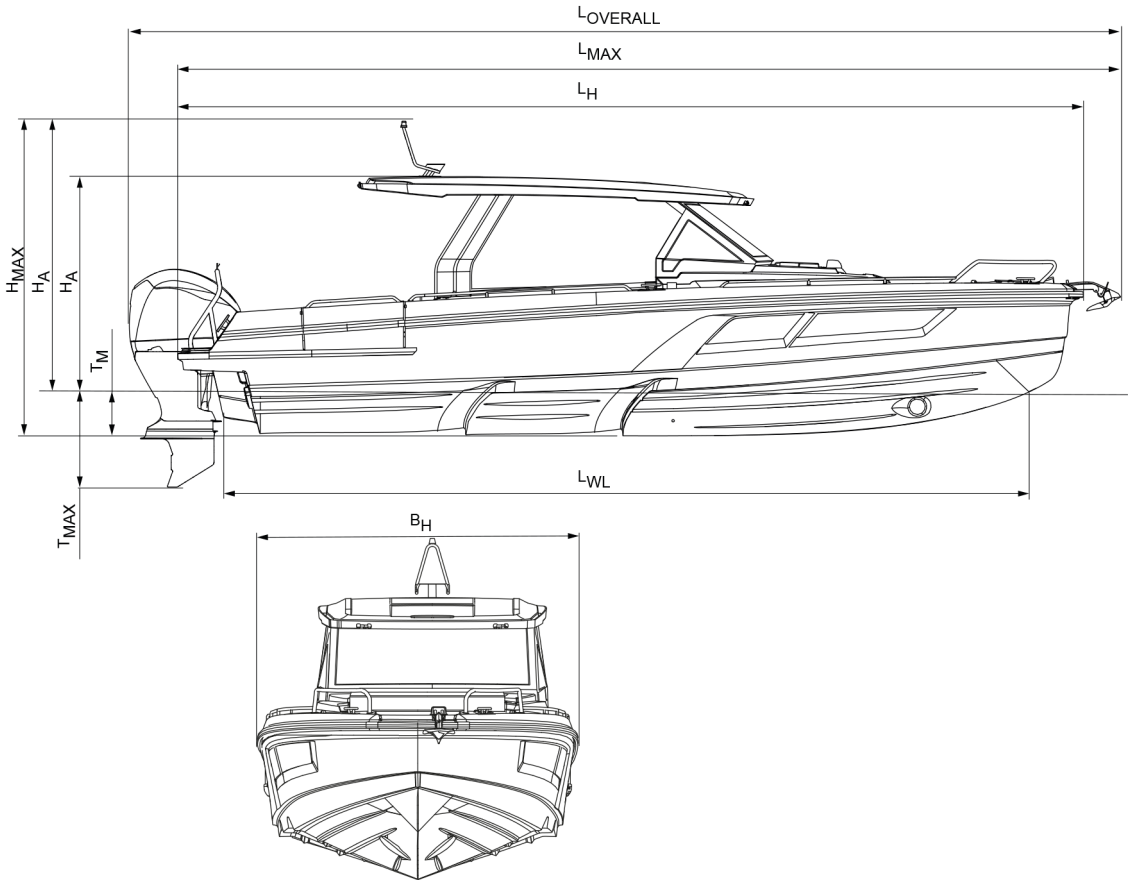


*Figure 9.1 Quarken 35 Sport Tourer dimensions*

| Dimensions | m | ft |
|---|---|---|
| Maximum beam ($B_{MAX}$) | 3.56 | 11.68 |
| Hull beam ($B_H$) | 3.48 | 11.42 |
| Maximum length ($L_{MAX}$) | 10.67 | 35.01 |
| Hull length ($L_H$) | 10.59 | 34.75 |
| Length on waterline ($L_{WL}$) | 9.42 | 30.90 |
| Maximum draft ($T_{MAX}$) | 0.91 | 3.00 |
| Hull draft ($T_M$) | 0.58 | 1.90 |
| Height ($H_{MAX}$) | 3.71 | 12.17 |
| Height from waterline, mast up ($H_A$) | 3.25 | 10.66 |
| Height from waterline, without light mast ($H_A$) | 2.57 | 8.43 |


© 2025 QUARKEN BOATS / QUARKEN LTD

| Weight and maximum recommended load | Details | Category B | Category C |
|---|---|---|---|
| | | kg (lb) | kg (lb) |
| **Empty craft ($m_{EC}$)** | | 4355 (9601) | 4355 (9601) |
| **Boat weight without load ($m_{LC}$)** | **Maximum trailering weight, of which:** | 4905 (10814) | 4905 (10814) |
| | Minimum operational equipment | 60 (132) | 60 (132) |
| | Engine | 550 (1213) | 550 (1213) |
| **Maximum load ($m_{MTL}$)** | **Of which:** | 1790 (3946) | 1980 (4356) |
| | Total person mass.<br>Calculated average:<br>• Adult 75 kg (165 lb)<br>• Child 37.5 kg (83 lb) | 750 (1653) | 900 (1984) |
| | Personal luggage and stores | 100 (220) | 120 (265) |
| | Edible stores and provisions | 100 (220) | 120 (265) |
| | Gasoline | 600 (1323) | 600 (1323) |
| | Fresh water | 120 (265) | 120 (265) |
| | Septic waste | 120 (265) | 120 (265) |
| **Boat weight with maximum load ($m_{LDC}$)** | | 6635 (14628) | 6785 (14958) |

| Tank capacities | L | gal |
|---|---|---|
| Gasoline fuel tank | 800 | 211 |
| Fresh water tank | 120 | 32 |
| Septic tank | 120 | 32 |
| Diesel tank | 40 | 11 |


© 2025 QUARKEN BOATS / QUARKEN LTD

| Bilge pump output capacities | L/s | gal/min |
|---|---|---|
| Electric bilge pump | 41 | 650 |
| Manual bilge pump | 33 | 523 |

| Recommendations for mooring, anchoring and towing | |
|---|---|
| Line types for mooring and towing | • Polyamide, polyester and nylon lines 12 mm (in) |
| Anchor chain type | • Diameter 10 mm (in)<br>• Length 3.5 m (ft) |
| Strength ratings for mooring, towing and anchoring lines | • Towing and anchoring from front cleat: 40.5 kN<br>• Mooring forward force rating for front and centre cleats: 32.0 kN<br>• Mooring rearward force rating for the back cleat: 26.6 kN |
| External anchors | • Main anchor minimum 10 kg (22 lb)<br>• Secondary anchor 7.5 kg (17 lb) |


© 2025 QUARKEN BOATS / QUARKEN LTD